PSM co.

Catalogue
Knowledge - Experience - Technology

PSM

PETRO SAZEH MIHAN CO.

Grade-1 knowledge enterprise company

Products :

Control Globe Valve (Reciprocating / Rotary)
General & Control Ball Valve (Metal Seat / Soft Seat)
General & Control Butterfly Valve
High Tempreature Valve (Let down / Desuperheater)
On / Off Valve & Shut Off Valve
Piston Valve
Safety Valve
Regulator Valve

Services :

HVOLF Coating
Ball Grinding
Reverse Engineering
Valve Repair
Pattern Making
Control Valve CV Test
Routine Tests For Valve
Special Valve Design and Manufacture

INDEX

01 Brief History
02 Departments
04 Services
06 List of equipment
07 Laboratory & Quality Control Equipment
10 Control Reciprocating Globe Valve (51000 Series)
12 Control Reciprocating Globe Valve (31000 Series)
14 Control Reciprocating Globe Valve (38000 Series)
16 General Ball Valve (35000 Series)
18 Control Ball Valve (45000 & 46000 Series)
22 General & Control Butterfly Valve (43000 & 53000 Series)
24 Rotary Globle Valve (62000 Series)
26 Let Down High Temprature Valve (66000 Series)
28 Desuperheater High Temprature Valve (65000 Series)
30 Piston Valve (10000 Series)
32 Safety Valve (57000 Series)
34 Pneumatic Actuators (63/ 62 – 98 / 97 Series)
36 Pressure Reducing Regulators (70000 Series)
40 Loop Test (Control Valve Capacity Test CV)
41 Sizing & Analysis
42 HVOF Thermal Spray
46 Clients

Certificate of Registration

پروانه تحقیق و توسعه

OHSAS ISO 18001

ISO 14001

ISO 9001

ISO 29001

گواهی صلاحیت

نتیجه ارزیابی

پروانه بهره برداری

دانش بنیان تولیدی نوع ۱

در زمینه طراحی و تولید شیرهای کنترلی

آمده‌ایم ملی بسازیم تا بجا نیم

PETRO SAZEH MIHAN CO.
PSM Grade-1 knowledge enterprise company

Brief History

Petro Sazeh Mihan Co. was established by Mr. Rezaei and a team of experts in the field of control valves, in 1997. which has grown steadily to design and manufacture control valves with localized knowledge in Iran. We began our journey with refurbishing and repair of industrial valves. The efforts finally led to manufacturing control valves with actuators, through the utilization of the knowledge and experience gained by manufacturing and repair of control valves and actuators' components.
With the help of our exclusive knowledge and cutting-edge and fully automated machining tools, we design and manufacture industrial valves for the Aviation industry, Marine industry, Oil and Gas industry, and power plants.

Departments

Engineering

- **PSM** designs is a combination of proven engineering expertise with state of state-of-the-art technology,
- **PSM** engineers use advanced technical software & standards
- **PSM** employs its exclusive control valve sizing software

ENG

Pro

Production

- Grinding
- Pattern Making
- Production of all mechanical parts of valves
- Painting
- Valve testing
- Packing

HVOLF

HVOLF

- Coating and grinding of Balls up to 34-inch diameter
- Coating of Cylindrical parts up to 6000 mm in length
- Coating of Plate or smooth pieces to 6000 mm length & 2000 mm width
- Exclusive Engineering & QC system for Coating
- Commonly Sprayed coating materials including cermets (WC-Co,WC-Co-Cr) Chrome Carbide, MCrALY, Colmonoy (Nickel alloy). Stellite (Cobalt alloy).

Research and Development

R&D

- Improve the quality of products and services
- New product introduction to the company product portfolio
- Develop and provide technical knowledge for industrial designs
- Practical research in the required fields by related industries

QC

Quality Control

- Hardness Testing
- Pipe Wall Thickness Testing
- Fugitive Emissions Testing
- Dimensional Testing
- Paint Thickness Testing
- Torsion Testing
- Loop Test
- Hydro Test
- Leakage Test

R&M

Repair & Maintenance

- Testing all types of valves up to 42 inches and 2500 Class according to industry-accepted standards
- Testing all types of control valves according to industry-accepted standards
- Performing hydrostatic and leakage tests
- Reconstruction and repairs of all types of valves following the appropriate standards and requirements
- Manufacturing spare parts for all kinds of valves

Services

Special Valve Design & Manufacture

PSM Co. design & fabricate special valves such as :

Desuperheater valves, Let Down valves,...

Control Valve Loop Test

PSM Co. has a special & exclusive control valve test bench
(Size :1"~24"
Class 150~2500)

Valve casting Pattern Making

Relying on the experience, advanced software, and technical knowledge of our experts, we make casting patterns professionally. Designed patterns in this company are made according to standards such as DIN 1511. These patterns are professionally made for the Control Globe valve (1 ½ "– 24") and Control Ball valve (2"-18").

HVOLF Coating

HVOLF process is one of the most popular thermal spray technologies and has been used in many industries due to its flexibility and the superior quality of coating produced compared to other thermal spray techniques. It produces a coating of higher bond strength and higher hardness together with lower porosity than other thermal spray processes such as the plasma spray.

Ball Grinding

PSM co. provides grinding and lapping services for all types of industrial valves with a smoothness of 0.2 microns and a spherical accuracy of 2 microns in the dimension's domain of ½ to 34 inches.

Reverse Engineering

The process of Reverse engineering includes studying an existing product (which is not possible to get its original design documents) and analyzing each part of it, to re-create the original design.
Hence, our engineers, use the obtained results to develop and design various products in full compliance with the latest standard revisions.

Valve Repair

PSM Co. able repair all kind of valves such as : Control valves ,On/off valves, Ball valves ...

General Valve Standard Test

Test Benches :
5 Hydrostatic and leakage test benches
(Size : 1 / 2 -32 in / Class : 150 - 2500)
Loop Test :
(Size : 1-24 in / Class : 150 - 2500)

List of equipment

01 3 unit of ball lathe machine in different sizes from 1 to 34 inches

02 3 unit of CNC grinding ball from 1 to 34 inches

03 2 unit of four axis CNC Milling Machines

04 3 unit of CNC lathe machines

05 Thermal Spray Coating HP-HVOLF 8 axis Robotic Thermal Spray facility for coating

06 2 Unit of Abrasive Blast Machine

07 5 Hydrostatic & Leakage test bench (Size : ½ - 32 inche Class : 150 - 2500)

08 Control Valve Special Loop Test (Size : 1 - 24 inch Class : 150 - 2500)

09 2 unit of CNC Boring Machines

Laboratory & Quality Control Equipment

Electroless Nickel Plating

Positive Material Identification (PMI)

Surface Roughness Tester

Coating Thickness Measurement

Painting Thickness Measurement

Humidity Meter & Thermometer

Digital Hardness measurement
with processing software

Trinocular Inverted Metallurgical
Microscope with Image Analysis Software

Cutter & Polisher & Mounting

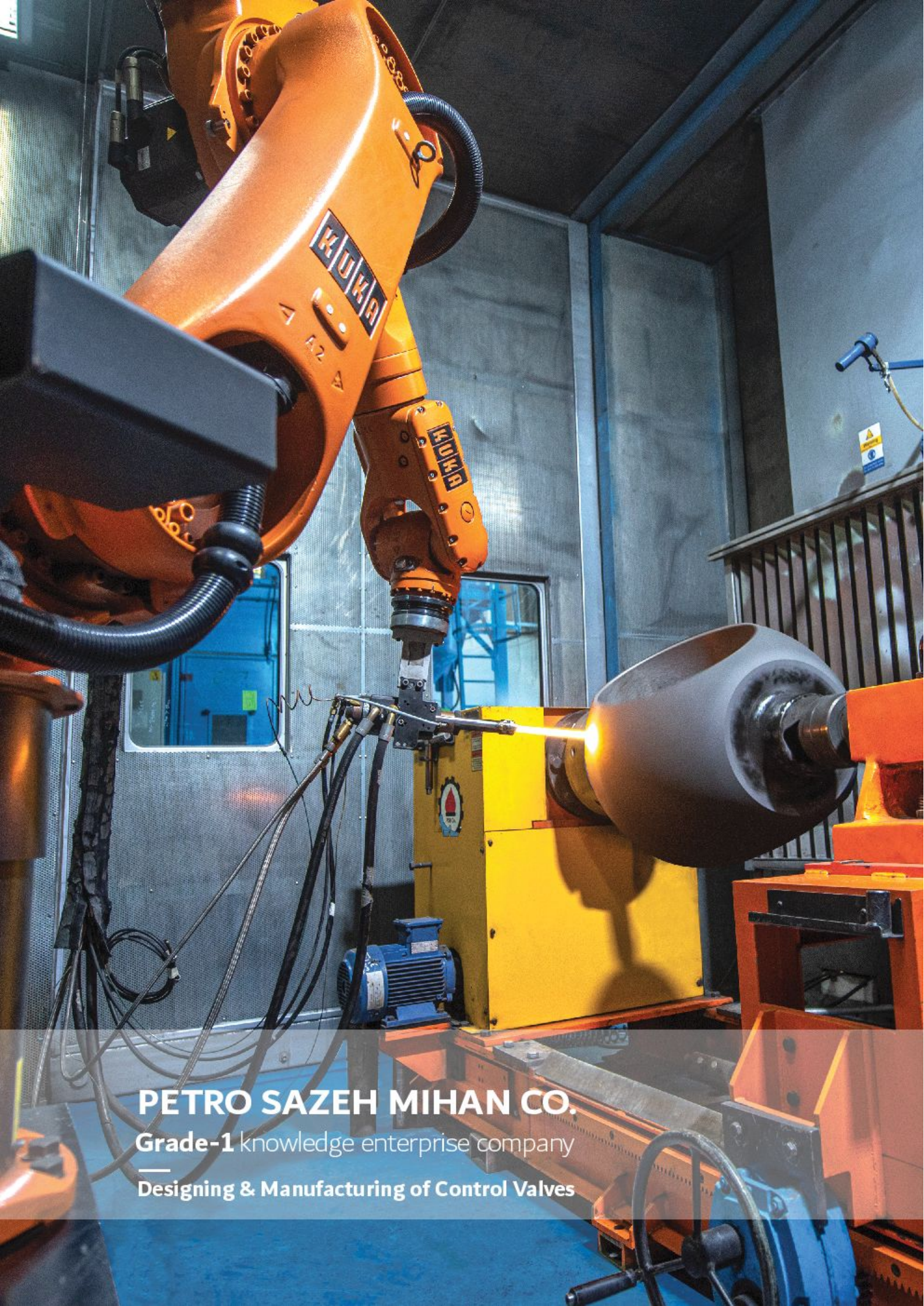

PETRO SAZEH MIHAN CO.

Grade-1 knowledge enterprise company

Designing & Manufacturing of Control Valves

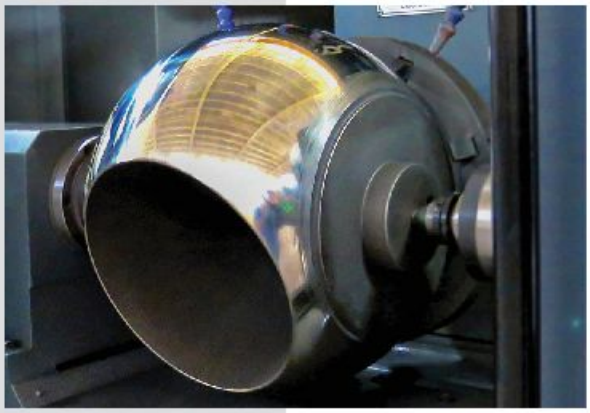

Control Reciprocating Globe Valve (51000 Series)

A globe valve, is a type of valve used for regulating flow in a pipeline, consisting of a movable plug or disc element and a stationary ring seat in a body

Features :
Balanced
Cage Guided
Noise Control / Anti Cavitation
Easy Maintenance and Customer Oriented
Special Design and Fabrication Capability According to Client's Special Offers
All the main fabrication steps such as Designing – Cage Drilling / Milling -Seat and Plug Coating Machining- Seat and Plug Lapping Test, Routine Tests, ... are doing by the PSM's exclusive equipment.

Options :
Linear / Equal / Quick Change / Modified Linear / Modified Equal Characteristics
Multi Hole / Countered Cages
Multi Stage Cage
Standard / High Capacity
Standard / Extension Bonnet
Oxygen Service / Cryogenic / Standard
Loop Test / CV Test
Dead Band Test
Hysteresis Test
Metal / PTFE / Graphite Seal Ring
Through / Angle Body
Full/Reduced Trim
Fieldbus Positioner / Special Instrument
Spring Diaphragm / Piston Spring Actuators

General Data :
Size : 2 - 24 in
Class : 150 - 2500
Connection : Weld (Socket / Butt), Threaded, Flanged (RF / RTJ)
Body Material : Carbon Steel (A105), Stainless Steel (S.S316), Ductile Iron (WCB, WCC, CF8M, CF3M) Bronze, Monel, ...

Some of clients :
Pars Phenol Petrochemical Company / JAM Petrochemical Company / Arak Petrochemical Company Laleh Petrochemical Company

Stud Bolt
Nut
Spring Washer
Gland
Packing Follower
Packing
Spacer
Lock Nut
Stem
Bonnet
Body Nut
Plug Nut
Seal
Plug
Gasket-Cage
Inner Cage
Outer Cage
Body Bolt
Seat
Seat Gasket

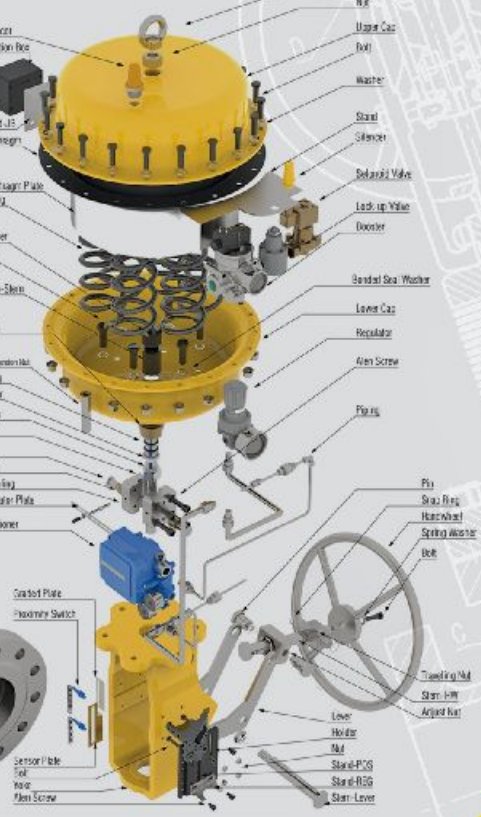
Fire Nut
Nut
Upper Cap
Bolt
Washer
Stand
Silencer
Solenoid Valve
Lock up Valve
Booster
Bonded Seal Washer
Lower Cap
Regulator
Allen Screw
Piping
Pin
Stop Ring
Handwheel
Spring Washer
Bolt
Travelling Nut
Stem-HW
Adjust Nut
Lever
Holder
Nut
Stand-PCS
Stand-RCS
Stem-Lever
Silencer
Junction Box
Stand JB
Diaphragm
Diaphragm Plate
Spring
Spacer
Bolt
Bush-Stem
Bush
Compression Nut
Oring
Washer
Stem
Nut
Pin
Bush
Coupling
Indicator Plate
Positioner
Graduated Plate
Proximity Switch
Sensor Plate
Bolt
Washer
Allen Screw

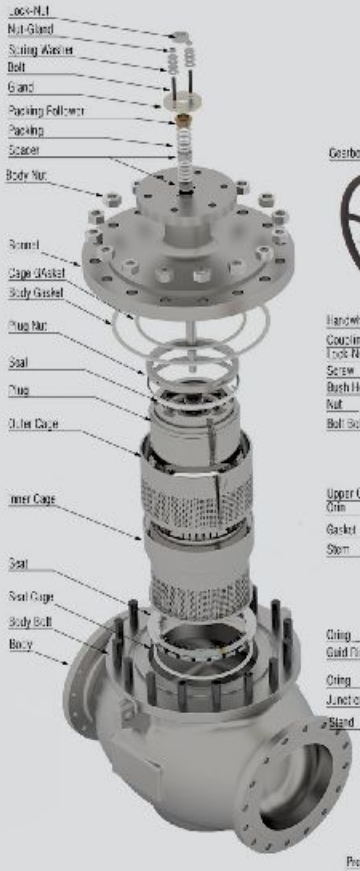
Lock-Nut
Nut-Gland
Spring Washer
Bolt
Gland
Packing Follower
Packing
Scraper
Body Nut
Bonnet
Cage Gasket
Body Gasket
Plug Nut
Seal
Plug
Outer Cage
Inner Cage
Seal
Seat Cage
Body Bolt
Body

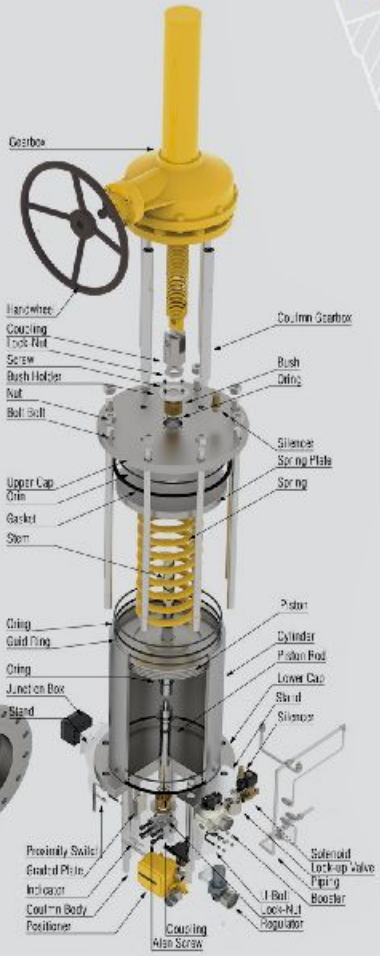
Gearbox
Handwheel
Coupling
Lock Nut
Screw
Bush Holder
Nut
Bolt Bolt
Column Gearbox
Bush
Oring
Silencer
Spring Plate
Spring
Upper Cap
Oring
Gasket
Stem
Oring
Guid Ring
Oring
Junction Box
Stand
Piston
Cylinder
Piston Rod
Lower Cap
Stand
Silencer
Proximity Switch
Graduated Plate
Indicator
Column Body
Positioner
Coupling
Allen Screw
Solenoid
Lock-up Valve
Piping
Booster
Lock-Nut
Regulator

Control Reciprocating Globe Valve (31000 Series)

A globe valve, is a type of valve used for regulating flow in a pipeline, consisting of a movable plug or disc element and a stationary ring seat in a body

Features :
Unbalanced
Top Guided
Noise Control / Anti Cavitation
Easy Maintenance and Customer Oriented
Special Design and Fabrication Capability According to Client's Special Offers
All the main fabrication steps such as Designing – Cage Drilling / Milling-Seat and Plug Coating Machining - Seat and Plug Lapping Test, Routine Tests, ... are doing by the PSM's exclusive equipment.

Options :
Linear / Equal / Quick Change / Modified Linear / Modified Equal Characteristics
Multi Hole Cages
Multi Stage Cage
Standard / High Capacity
Standard / Extension Bonnet
Oxygen Service / Cryogenic / Standard
Loop Test
Dead Band Test
Hysteresis Test
Metal / PTFE / Graphite Seal Ring
Through/Angle Body
Multi Hole / Countered Plug
Fieldbus Positioner / Special Instrument
Spring Diaphragm / Piston Spring Actuators

General Data :
Size: 3 / 4 - 8 in
Class: 150 - 2500
Connection: Weld (Socket/Butt), Flanged (RF/RTJ)
Body Material : Carbon Steel (A105), Stainless Steel (S.S316), Ductile Iron (WCB, WCC, CF8M, CF3M) Bronze, Monel, ...

Some of clients :
Pars Phenol Petrochemical Company / Arak Petrochemical Company / FanAvaran Petrochemical Company / Laleh Petrochemical Company

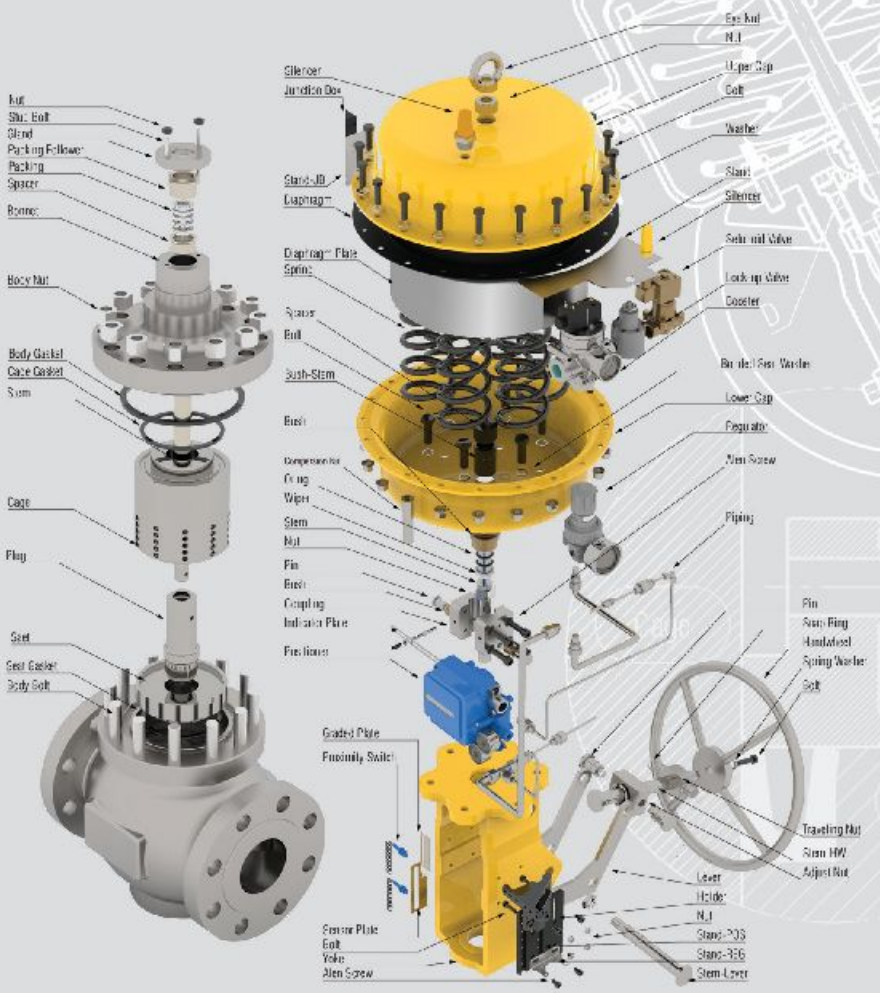
Nut
Stud Bolt
Gland
Packing Follower
Packing
Spacer
Bonnet
Body Nut
Body Gasket
Cage Gasket
Stem
Cage
Plug
Seat
Seat Gasket
Body Bolt
Silencer
Junction Box
Stand-JB
Diaphragm
Diaphragm Plate
Spring
Spacer
Ball
Bush-Stem
Bush
Compression Nut
O-ring
Wiper
Stem
Nut
Pin
Bush
Coupling
Indicator Plate
Positioner
Graded Plate
Proximity Switch
Sensor Plate
Bolt
Yoke
Allen Screw
Eye Nut
Nut
Upper Cap
Bolt
Washer
Stand
Silencer
Solenoid Valve
Lock up Valve
Booster
Bonnet Seat Washer
Lower Cap
Regulator
Allen Screw
Piping
Pin
Snap Ring
Handwheel
Spring Washer
Bolt
Traveling Nut
Stem HW
Adjust Nut
Lever
Holder
Nut
Stand-POS
Stand-RES
Stem Lever

Control Reciprocating Globe Valve (38000 Series)

A globe valve, is a type of valve used for regulating flow in a pipeline, consisting of a movable plug or disc element and a stationary ring seat in a body

Features :
Precise Microflow Valves with Compact Design and Flexible Capabilities
Heavy Top - Guiding (valve plug support is provided along the entire stroke length)
Application Flexibility (Ten standard contoured trim designs using the same body platform)
Adjustable CV
Compact Assembly
Unbalanced
Anti - Cavitation Trim
Easy Maintenance and Customer Oriented
Special Design and Fabrication Capability According to Client's Special Offers
All the main fabrication steps such as Designing - Seat and Plug Coating - Machining - Seat and Plug Lapping Test, Routine Tests ... are doing by the PSM's exclusive equipment.

Options :
Linear / Equal / Quick Change / Modified Linear / Modified Equal Characteristics
Loop Test / Dead Band Test / Hysteresis Test
High pressure
Bellows seal
Cryogenic
Angle valve
NACE version
Fieldbus Positioner / Special Instruments
Spring Diaphragm Actuator

General Data :
Size : 1 / 2 - 1 1 / 2 in
Class : 150 - 2500
Connection : Weld (Socket/Butt), Flanged (RF/RTJ)
Body Material : Carbon Steel (A105), Stainless Steel (S.S316), Ductile Iron (WCB, WCC, CF8M CF3M), Bronze, Monel, ...

Some of clients :
Pars Phenol Petrochemical Company / Arak Petrochemical Company

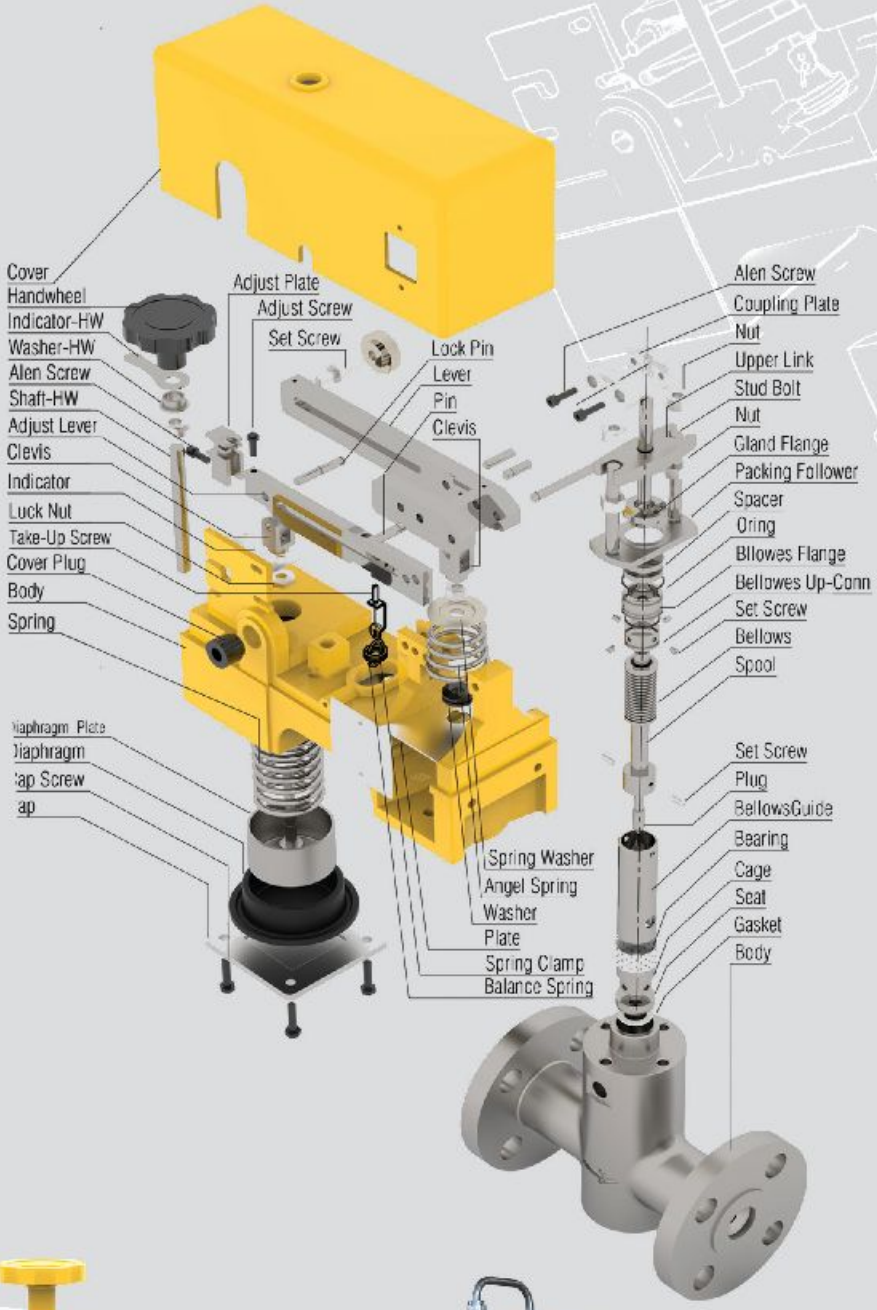
Cover
Handwheel
Indicator-HW
Washer-HW
Alen Screw
Shaft-HW
Adjust Lever
Clevis
Indicator
Luck Nut
Take-Up Screw
Cover Plug
Body
Spring
Adjust Plate
Adjust Screw
Set Screw
Lock Pin
Lever
Pin
Clevis
Alen Screw
Coupling Plate
Nut
Upper Link
Stud Bolt
Nut
Gland Flange
Packing Follower
Spacer
Oring
Bllowes Flange
Bellowes Up-Conn
Set Screw
Bellows
Spool
Set Screw
Plug
BellowsGuide
Bearing
Cage
Seat
Gasket
Body
Spring Washer
Angel Spring
Washer
Plate
Spring Clamp
Balance Spring

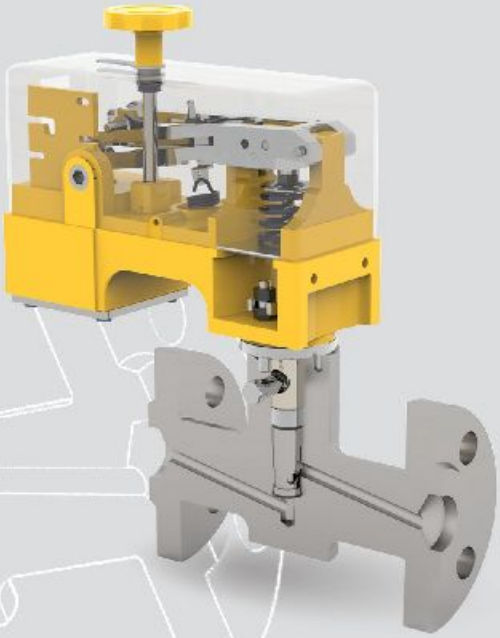

General Ball Valve (35000 Series)

A ball valve is a form of quarter - turn valve which uses a hollow, perforated and pivoting ball to control flow through it. It is open when the ball's hole is in line with the flow and closed when it is pivoted 90 - degrees by the valve handle.

Features :
Special Design and Fabrication Capability According to Client's Special Offers
All the main fabrication steps such as Designing – Ball Grinding - Ball Coating-Machining - Seat and Ball Lapping, Routine Tests, ... are doing by the PSM's exclusive equipment.

Options :
Side Entry / Top Entry
One / Two / Three Piece
Multi Way
Double Block & Bleed
Floating / Trunnion
Metal / Soft Seat
Full / Reduced Bore
Oxygen Service / Cryogenic / Standard
Jacketed/Standard
Fire Safe
Special / Standard Coating
Lever Operated / Gearbox
Antistatic Device
Blowout Proof Stem

General Data :
Size : 1/ 2 - 32 in
Class : 150 - 2500
Connection : Weld (Socket / Butt), Threaded, Flanged (RF / RTJ)
Body Material : Carbon Steel (A105), Stainless Steel (S.S316), Ductile Iron (WCB, WCC, CF8M, CF3M) Bronze, Monel, Brass

Some of clients :
Pars Phenol Petrochemical Company / Arak Petrochemical Company / Khangiran Petrochemical Company / Arya Sasol Polymer Company / Amirkabir Petrochemical Company

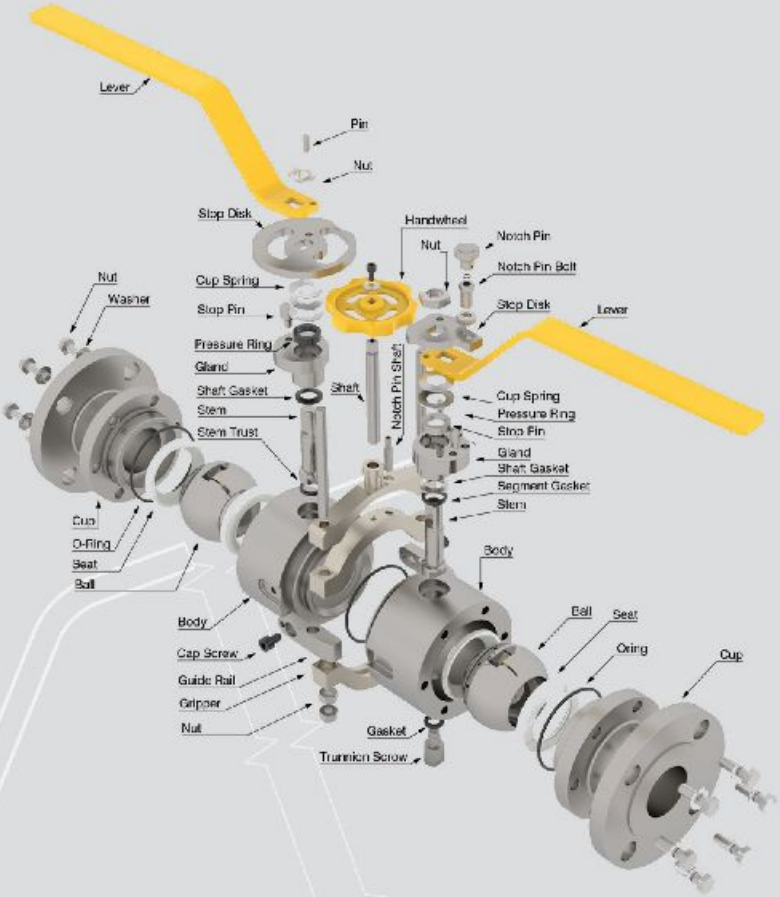
Lever
Pin
Nut
Stop Disk
Handwheel
Nut
Notch Pin
Notch Pin Bolt
Nut
Washer
Cup Spring
Stop Pin
Stop Disk
Lever
Pressure Ring
Gland
Shaft Gasket
Stem
Stem Trust
Shaft
Notch Pin Shaft
Cup Spring
Pressure Ring
Stop Pin
Gland
Shaft Gasket
Segment Gasket
Stem
Cup
O-Ring
Seat
Ball
Body
Body
Cap Screw
Guide Rail
Gripper
Nut
Ball
Seat
Oring
Cup
Gasket
Trunnion Screw

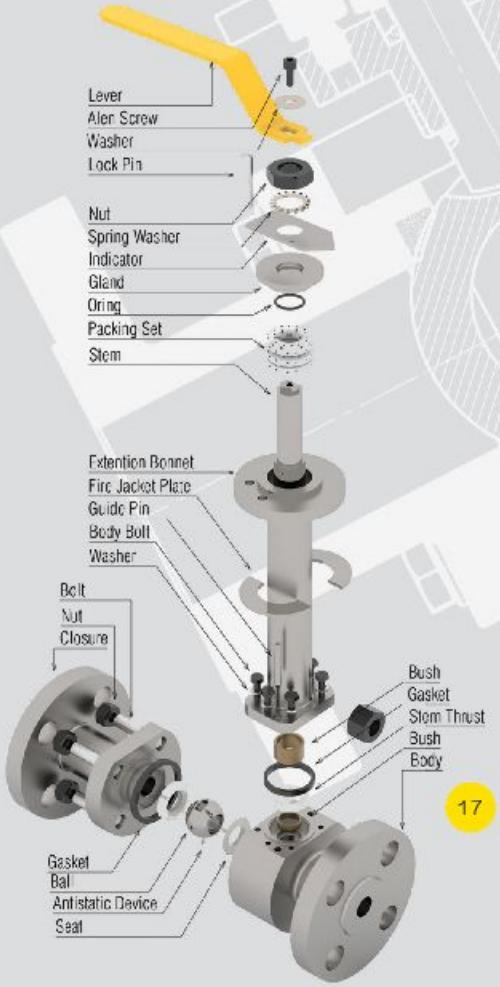
Lever
Alen Screw
Washer
Lock Pin
Nut
Spring Washer
Indicator
Gland
Oring
Packing Set
Stem
Extention Bonnet
Fire Jacket Plate
Guide Pin
Body Bolt
Washer
Bolt
Nut
Closure
Bush
Gasket
Stem Thrust
Bush
Body
Gasket
Ball
Antistatic Device
Seat

Control Ball Valve (45000 & 46000 Series)

A ball valve is a form of quarter - turn valve which uses a hollow, perforated and pivoting ball to control flow through it. It is open when the ball's hole is in line with the flow and closed when it is pivoted 90 - degrees by the valve handle.

45000 Series Control Ball Valve
Features :
Separable Bonnet design available
Straight through flow pattern provides greater flow capacities
The unique self - aligning eccentric rotating plug provides tight shut off and low dynamic forces.
A large variety of reduced trim options are available in all sizes

General Data :
Size: 1 - 24 in
Class: 150 - 2500
Connection : Weld (Socket / Butt), Threaded, Flanged (RF / RTJ)

46000 Series Control Ball Valve
Features :
High Capacity
Heavy Duty
Enhanced flow capacities
Excellent leakage control
Soft / Metal Seat
Reliable operation
Simplified maintenance
Body Type : Cast with integral bonnet
Body Material : Carbon steel / Stainless steel
Plug Type : high capacity “V” contoured segmented ball
Flow Characteristic : Equal percentage
Spring-Opposed Diaphragm / Spring - Opposed Rolling Diaphragm Actuators

General Data :
Size : 1 - 12 in
Class : 150 - 600
Connection : Flanged (RF / RTJ)

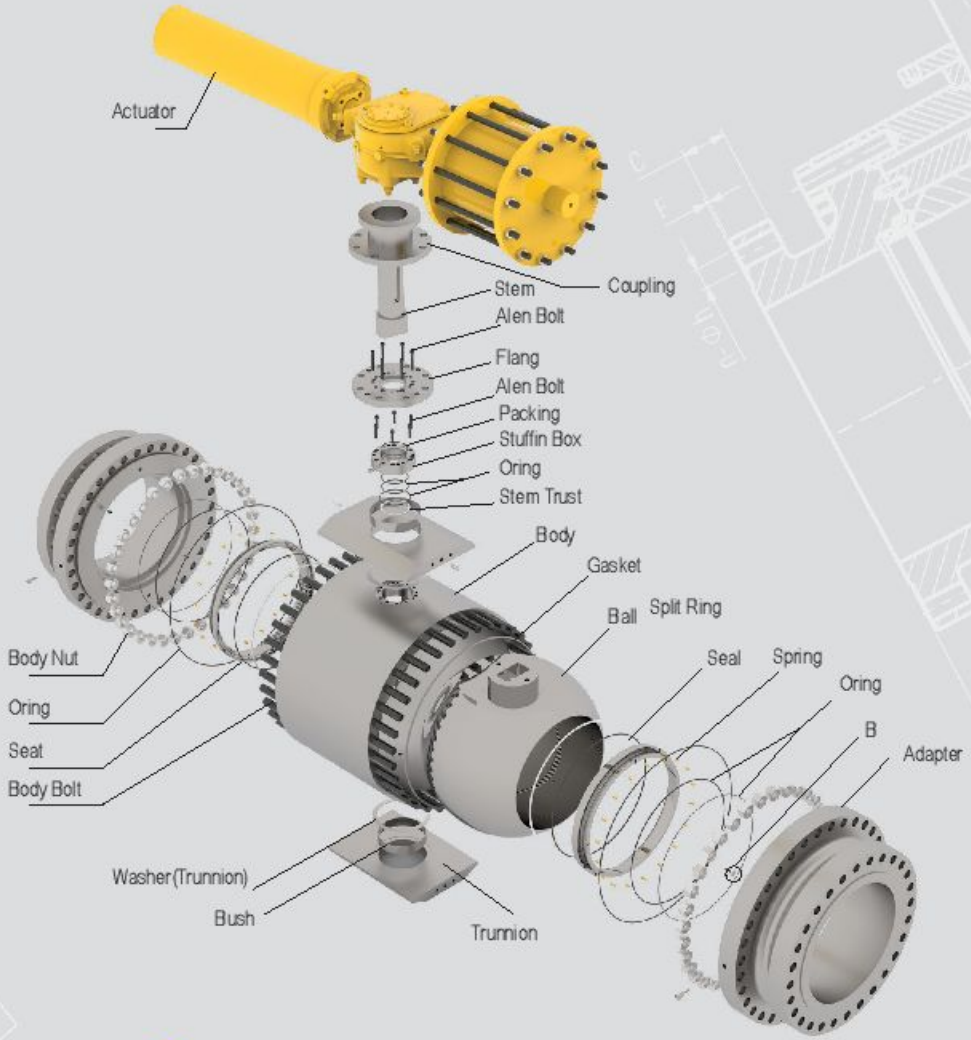
Actuator
Coupling
Stem
Alen Bolt
Flang
Alen Bolt
Packing
Stuffin Box
Oring
Stem Trust
Body
Gasket
Ball
Split Ring
Seal
Spring
Oring
B
Adapter
Body Nut
Oring
Seat
Body Bolt
Washer(Trunnion)
Bush
Trunnion

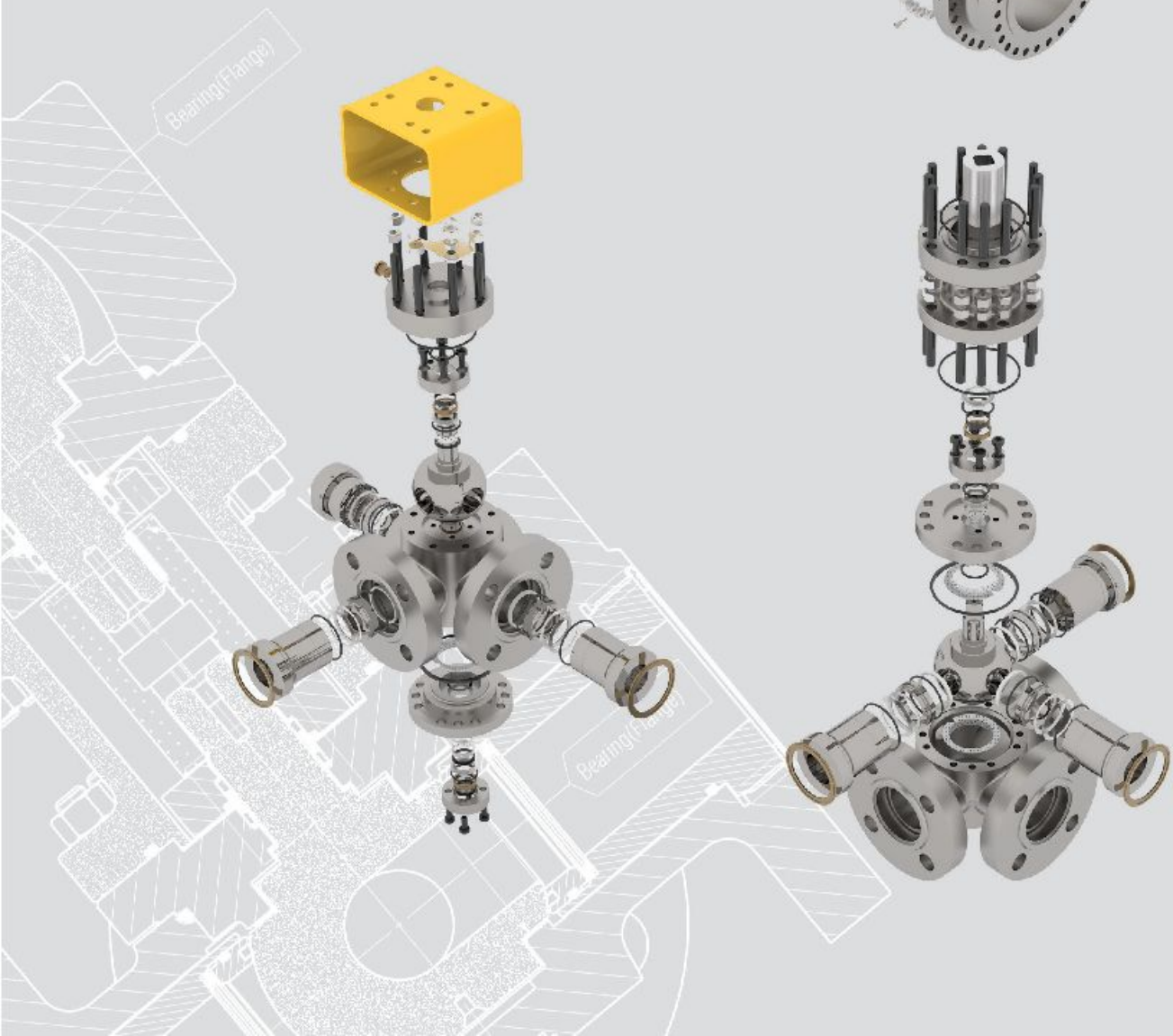

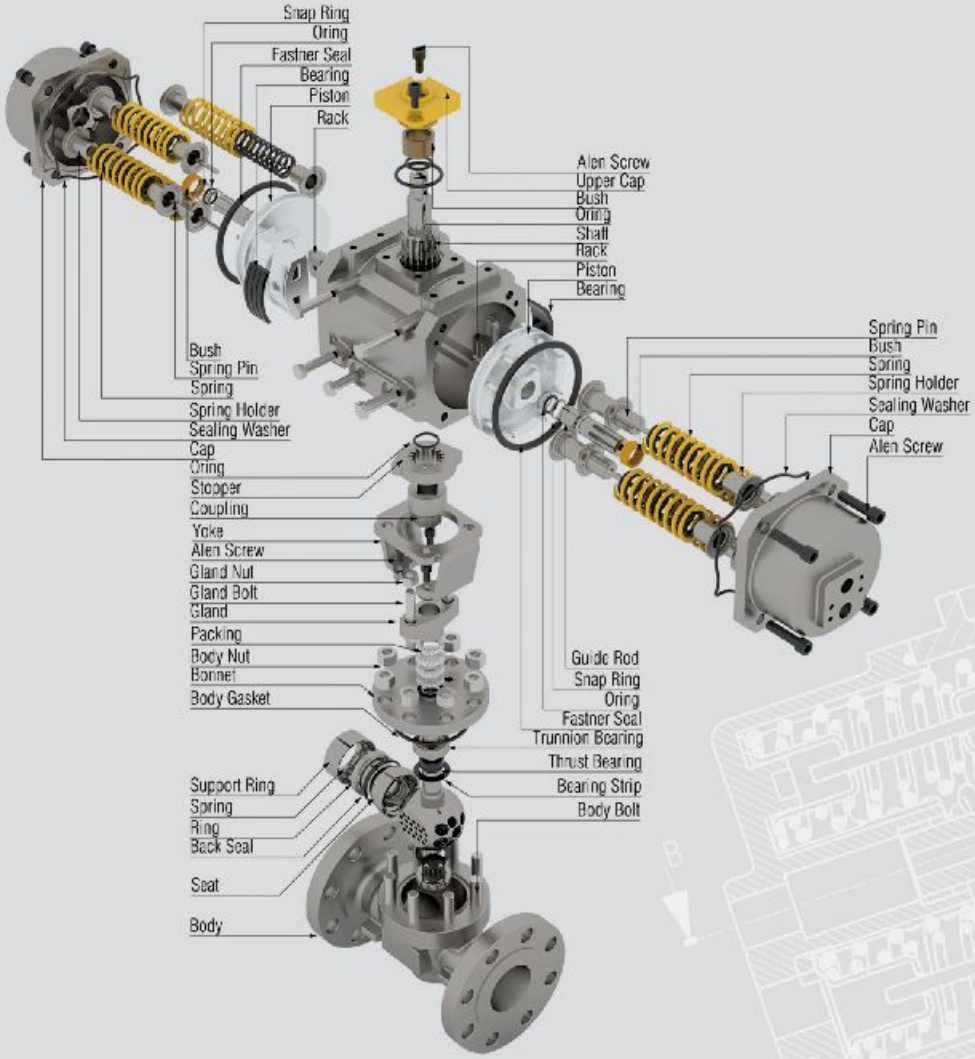
Snap Ring
Oring
Fastner Seal
Bearing
Piston
Rack
Alen Screw
Upper Cap
Bush
Oring
Shaft
Rack
Piston
Bearing
Spring Pin
Bush
Spring
Spring Holder
Sealing Washer
Cap
Alen Screw
Bush
Spring Pin
Spring
Spring Holder
Sealing Washer
Cap
Oring
Stopper
Coupling
Yoke
Alen Screw
Gland Nut
Gland Bolt
Gland
Packing
Body Nut
Bonnet
Body Gasket
Guide Rod
Snap Ring
Oring
Fastner Seal
Trunnion Bearing
Thrust Bearing
Bearing Strip
Body Bolt
Support Ring
Spring
Ring
Back Seal
Seat
Body

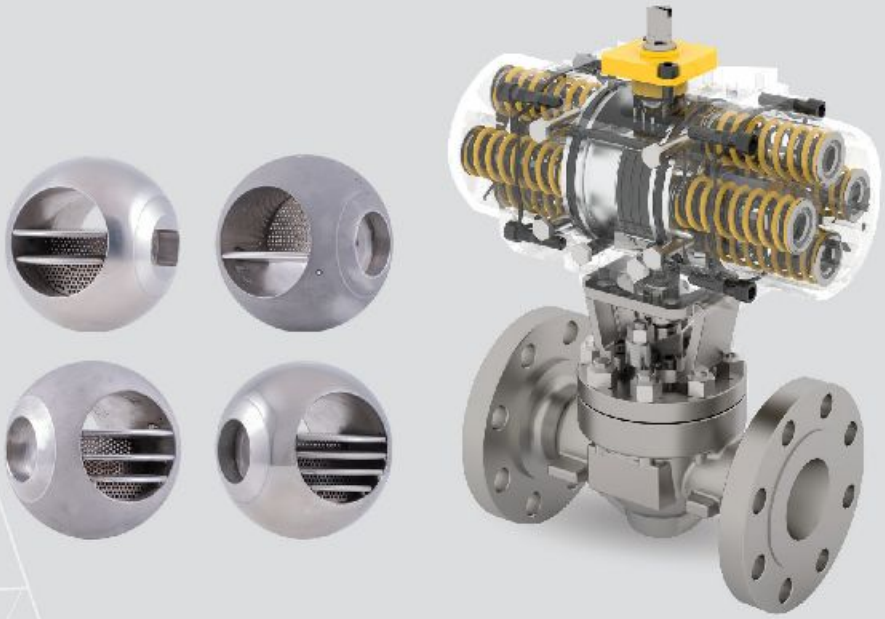

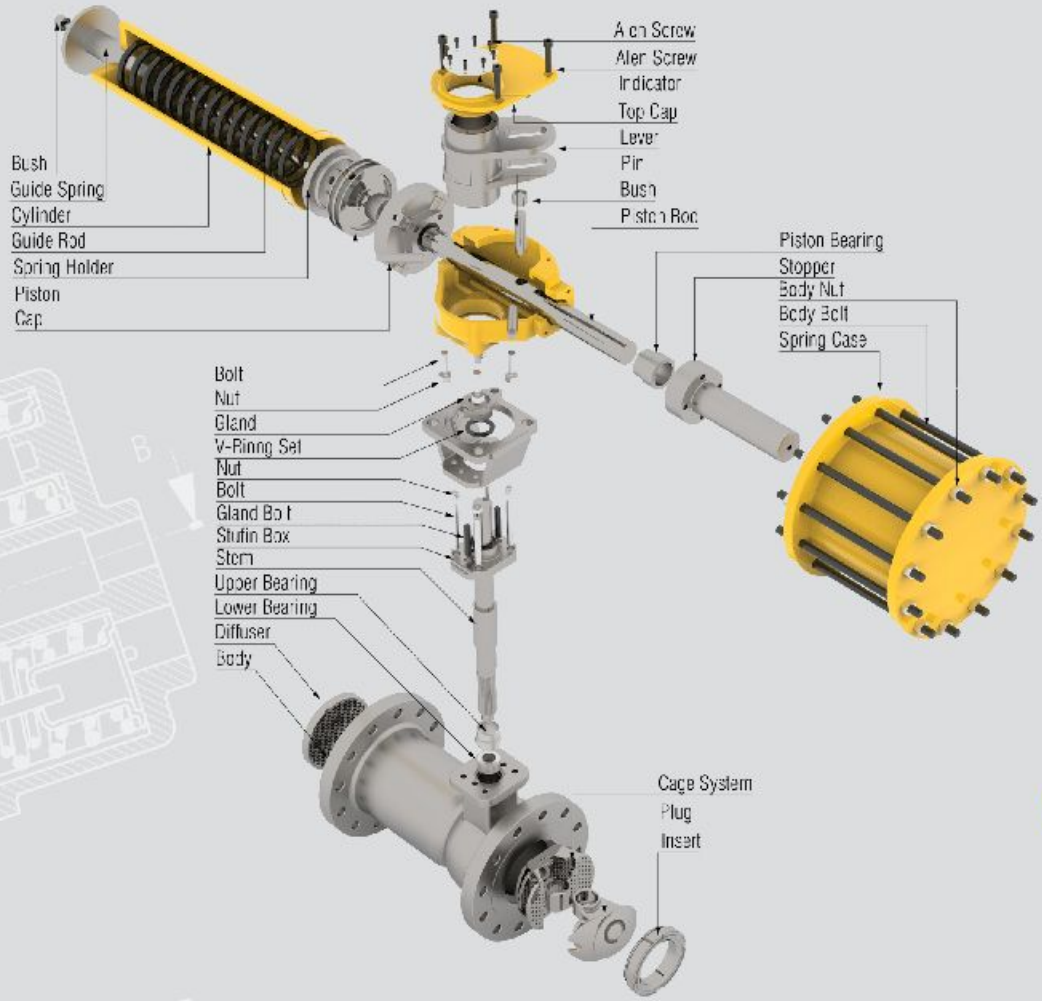
Bush
Guide Spring
Cylinder
Guide Rod
Spring Holder
Piston
Cap
Top Cap
Lever
Pin
Bush
Piston Rod
Piston Bearing
Stopper
Body Nut
Body Bolt
Spring Case
Bolt
Nut
Gland
V-Ring Set
Nut
Bolt
Gland Bolt
Stuffin Box
Stem
Upper Bearing
Lower Bearing
Diffuser
Body
Cage System
Plug
Insert

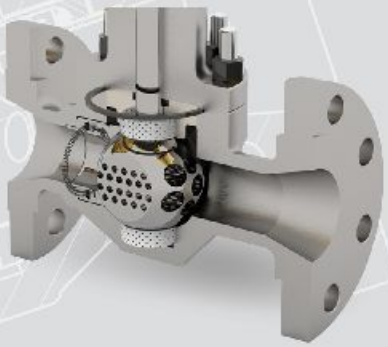

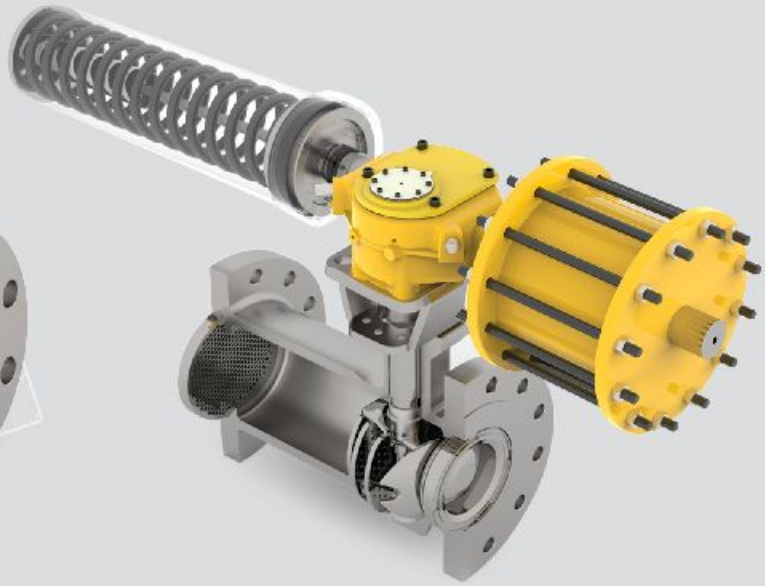

General & Control Butterfly Valve (43000 & 53000 Series)

A butterfly valve is a valve that isolates or regulates the flow of a fluid. The closing mechanism is a disk that rotates.

Features :
Triple Offset Butterfly Valve
High Technology in Designing and Fabrication
Bi - directional
Self - Centering Disc
Higher Cv than Other Types
Removal of Keyways or Pins
Low / Zero Leakage
High flow rates
Extremely high cycle life
Special Design and Fabrication Capability According to Client's Special Offers
All the main fabrication steps such as Designing - Seat and Disk Coating - Machining - Seat and Disk Lapping, Routine Tests ... are doing by the PSM's exclusive equipment.

Options :
Cryogenic
Fire Safe
Body Material : Carbon steel (A105/WCC, ...) / Stainless steel (S.S.316/CF8M, ...) / Low Temperature
Carbon Steel LCC
Spring-diaphragm, floating stem pneumatic actuator (3 - 8 in valve)
Spring return, rolling diaphragm pneumatic actuator (3 - 8 in valve)
Scotch-yoke piston actuator (8 - 60 in valve)
Different Actuator Mounting Position

General Data :
Size : 3 - 60 in
Class : 150 - 2500
Connection : Wafer / Double Flanged (RF / RTJ) / Weld (Socket / Butt) / Lug

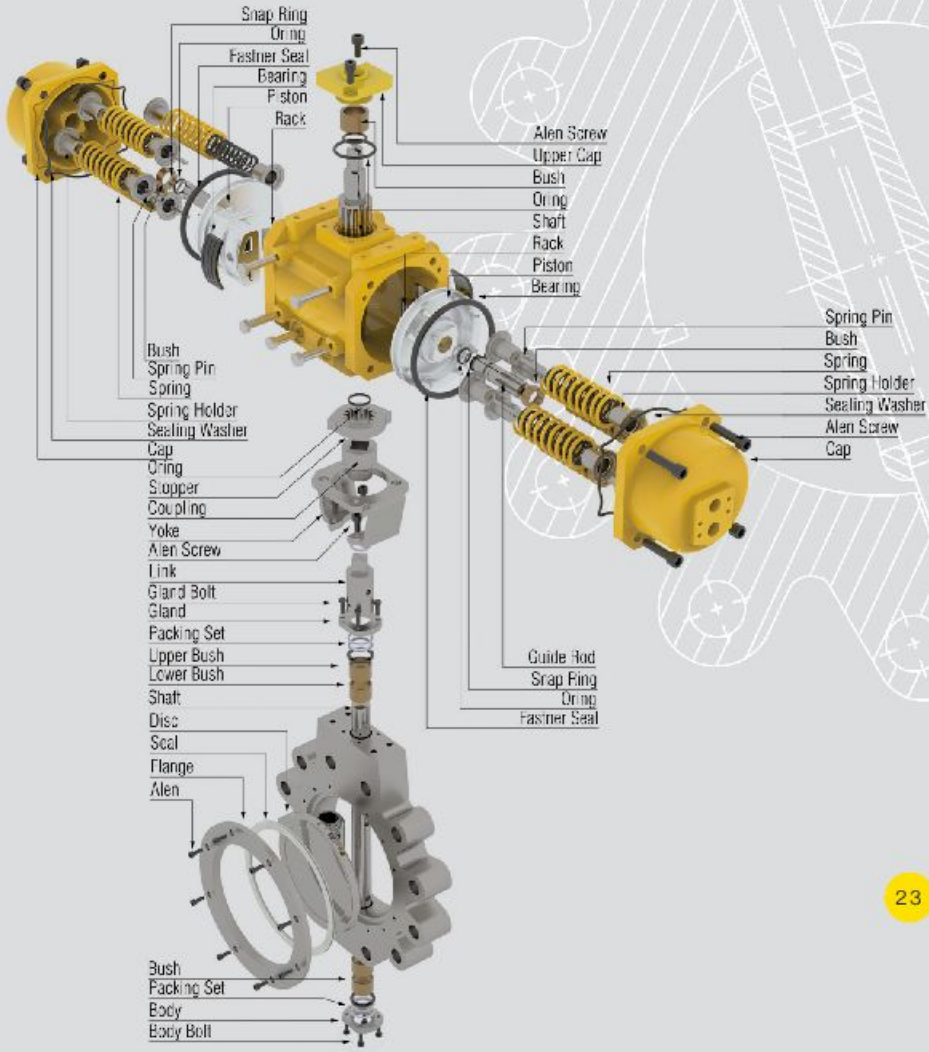
Snap Ring
Oring
Fastner Seal
Bearing
Piston
Rack
Alen Screw
Upper Cap
Bush
Oring
Shaft
Rack
Piston
Bearing
Spring Pin
Bush
Spring
Spring Holder
Sealing Washer
Alen Screw
Cap
Bush
Spring Pin
Spring
Spring Holder
Sealing Washer
Cap
Oring
Stopper
Coupling
Yoke
Alen Screw
Link
Gland Bolt
Gland
Packing Set
Upper Bush
Lower Bush
Shaft
Disc
Seal
Flange
Alen
Guide Rod
Snap Ring
Oring
Fastner Seal
Bush
Packing Set
Body
Body Bolt

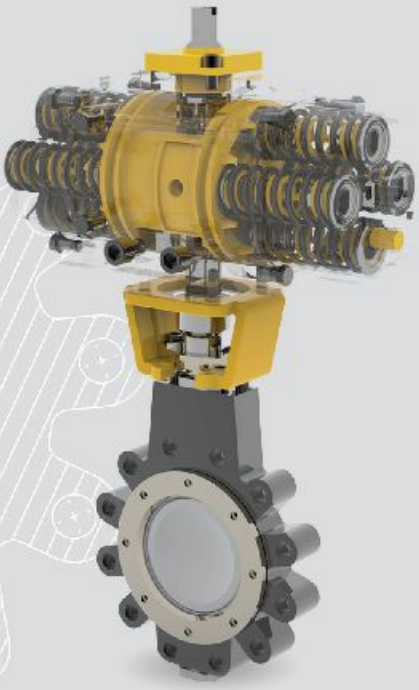

Rotary Globle Valve (62000 Series)

A globe valve, is a type of valve used for regulating flow in a pipeline, consisting of a movable plug or disc element and a stationary ring seat in a body

Features :
Easy Maintenance and Customer Oriented
Short and Reliable Delivery Time
Special Design and Fabrication Capability According to Client's Special Offers
All the main fabrication steps such as Designing –Coating-Machining- Lapping, Routine Tests, ... are doing by the PSM's exclusive equipment.
A large variety of reduced-trim options are available in all sizes.
Optional alloy constructions are available.
The valve position indicator is large and highly visible.

Options :
The flangeless body rating is a rugged ASME Class 600.
The flanged version is available in 1 in. through 12 in. (25 mm through 300 mm) sizes in 150 or 300 ASME, and 1 in. through 8 in. (25 mm through 200 mm) in 600 ASME.
Separable bonnet design is available.
Straight through flow pattern provides greater flow capacities.
Standard integral extension bonnet allows for a wide range of fluid temperature applications (-320°F to 750°F),(-196°C to 400°C).
The unique self-aligning eccentric rotating plug provides tight shutoff and low dynamic forces.
Loop Test/CV Test
Dead Band Test
Hysteresis Test
Metal/PTFE/Graphite Seal Ring
Full/Reduced Trim
Fieldbus Positioner/Special Instrument

General Data :
Size: 1 - 16 in
Class: 150 - 600
Connection: Weld (Socket/Butt), Threaded, Flanged (RF/RTJ)
Body Material: Carbon Steel (A105), Stainless Steel (S.S316), Ductile Iron (WCB, WCC, CF8M CF3M), Bronze, Monel, ...

Some of clients :
Arak Refinery Company

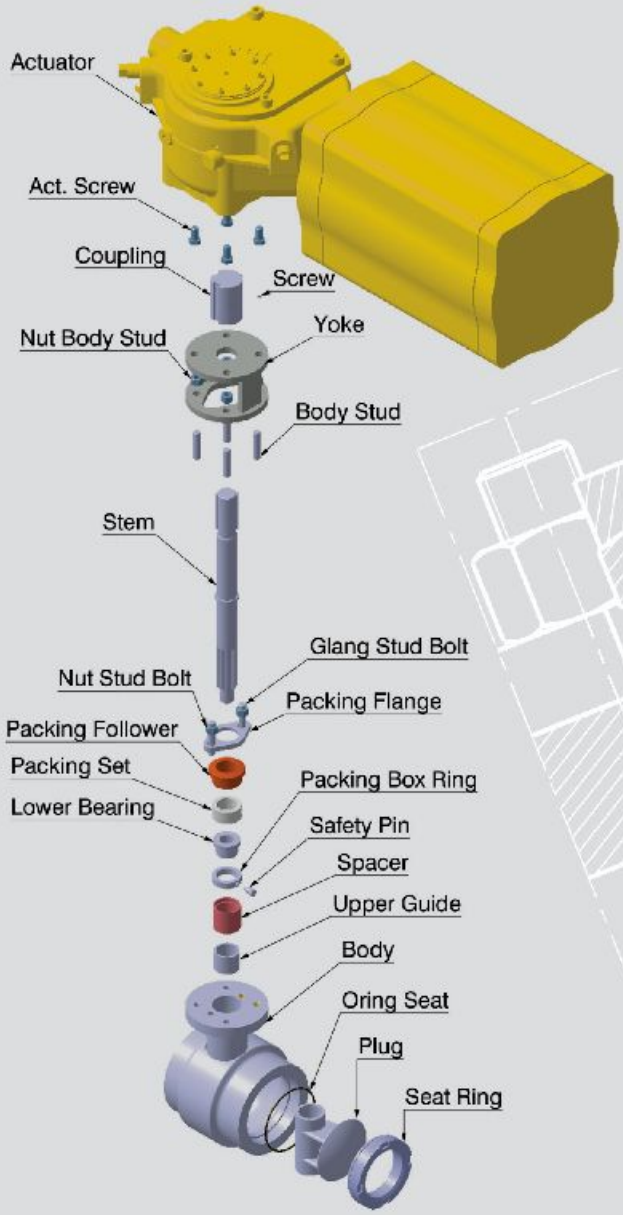
Actuator
Act. Screw
Coupling
Screw
Yoke
Nut Body Stud
Body Stud
Stem
Glang Stud Bolt
Nut Stud Bolt
Packing Flange
Packing Follower
Packing Set
Packing Box Ring
Lower Bearing
Safety Pin
Spacer
Upper Guide
Body
Oring Seat
Plug
Seat Ring

Let Down High Temprature Valve (66000 Series)

The let down valve is an angle type valve. It designed according to (P) and (T) of the steam to match the downstream requirements.

Features :
Pressure reducing stages
Designed specifical for each application
Minimize noise
Mechanical atomizing nozzles
Spray water injection
Temperature regulation
Balance tight design resulting in reduced required opening force

Options :
Extended outlet design
Quick exchangeable seat

General Data :
Size: 6 - 24 in
Class : 150 - 2500
Connection : Buttweld - Flanged
Body, inlet &outlet Material, A105 / A182 - F12, A182 - F22& A182 - F91
Seat Material : A182 - F22& A182-F91
Stem / Plug Material : AISI 616

Some of clients :
Bushehr Petrochemical Company

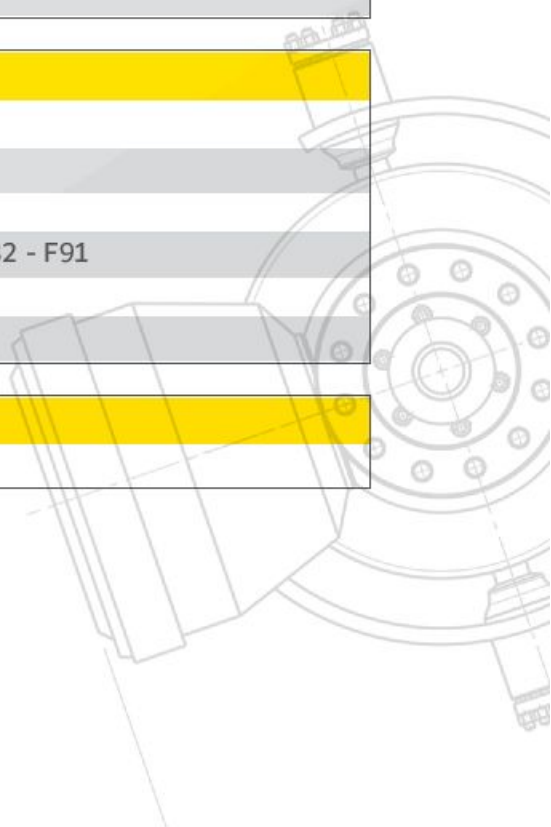

Outlet Pipe

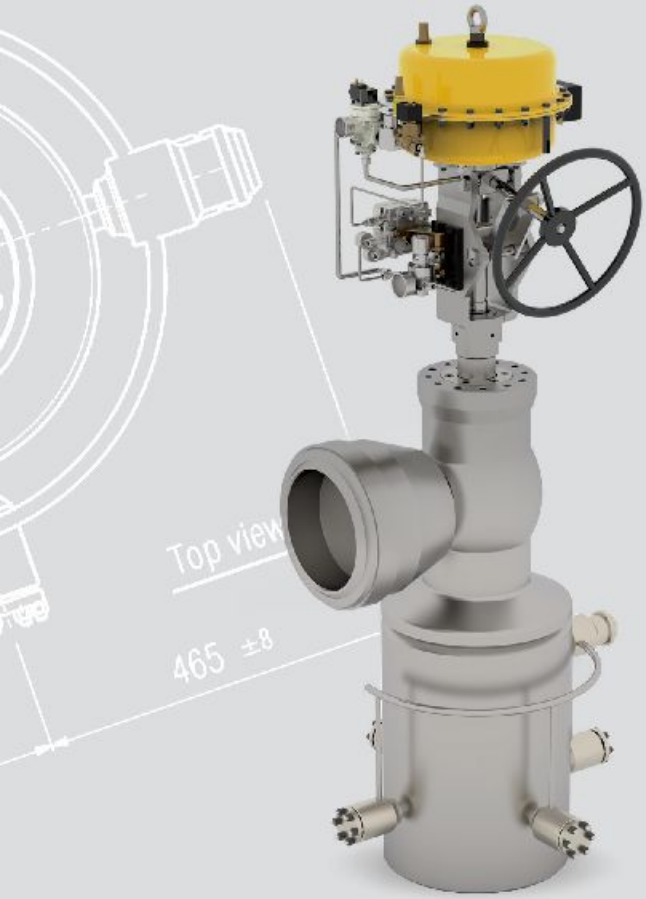

Top view
465 ±8

Desuperheater High Temprature Valve (65000 Series)

Desuperheater is a device that reduces the temperature of superheated steam so that it can be used in power plant & .....

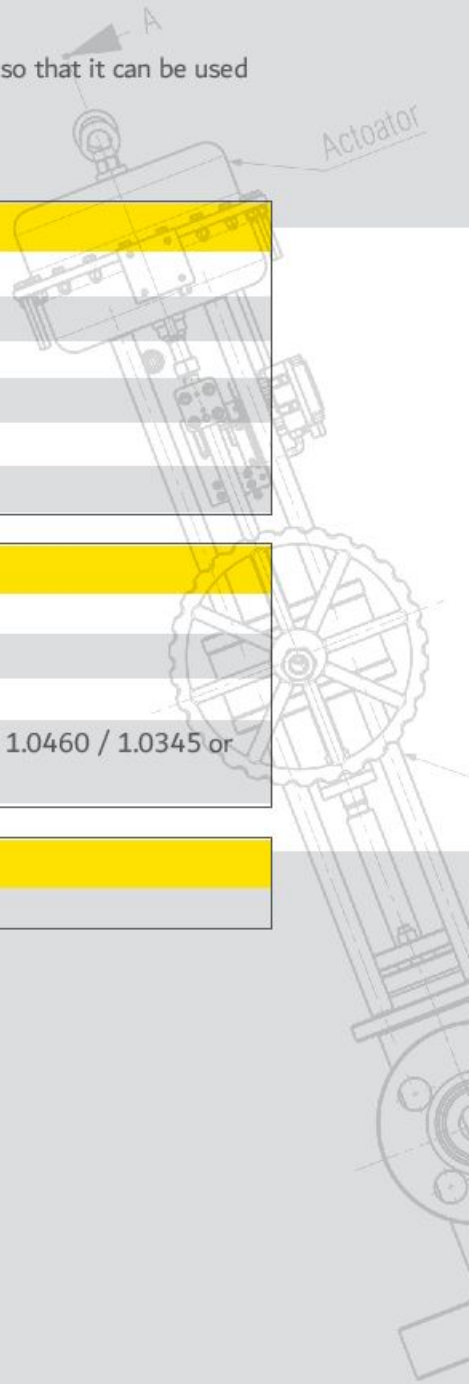

Features :
Fabricated construction
High quality stuffing box
Fixed / Variable nozzle type
Wide range of Cv (Kv) capacities available
Special nozzle combination available
Non / semi balanced internals for economic actuator selection

General Data :
Size : 1 - 4 in
Class : 150 - 1500
Connection : Flanged (RF / RTJ)
Body Material : ASTM (SA105) / (SA106 Gr . B or SA182F11 / SA335 P11 - 1.0460 / 1.0345 or 1.7335, other Material upon request

Some of clients :
Bushehr Petrochemical Company

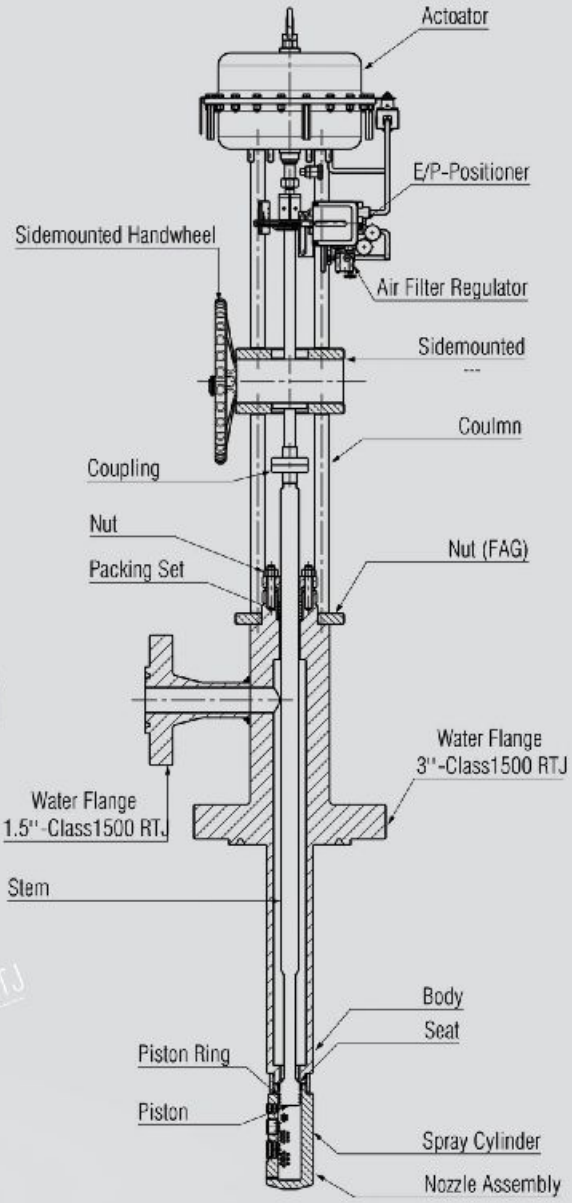
Actoator
E/P-Positioner
Sidemounted Handwheel
Air Filter Regulator
Sidemounted
Coulmn
Coupling
Nut
Packing Set
Nut (FAG)
Water Flange
3''-Class1500 RTJ
Water Flange
1.5''-Class1500 RTJ
Stem
Body
Seat
Piston Ring
Piston
Spray Cylinder
Nozzle Assembly

Piston Valve (10000 Series)

A piston valve is a device used to control the motion of a fluid along a tube or pipe by means of the linear motion of a piston within a chamber or cylinder.

Features :
Easy Maintenance and Customer Oriented
Short and Reliable Delivery Time
Special Design and Fabrication Capability According to Client's Special Offers
All the main fabrication steps such as Designing – Grinding - Coating - Machining - Lapping, Routine Tests, ... are doing by the PSM's exclusive equipment.
Full Bore - Low Pressure Drop

Options :
Welded Fabrication in different Material (Such as Stainless Steel (S.S.316, CF8M,304L,) , Carbon Steel (A105, ...), Duplex, Hastelloy, Monel, Inconel, ...
Polished Piston
Coated Piston
Radial piston sealing against packing rings
Rising non turning stem up to DN 32 included, turning non rising stem above
Position indicator
Outlet angle: 60° / 45°
Heating Jacket
Hard faced seat and / or piston seating surface (Stellite)
Bolted stuffing-box, self-adjusted with spring washers, repackable in service
Integral connection flanges class 150 - 2500
Conical metal - to - metal piston seating
Fixed or removable seat
Piston or Seat extension on request
Pneumatic, electric or hydraulic actuator / Manual override

General Data :
Size: 1 /2 - 8 in
Class: 150 - 2500
Connection: Weld (Socket / Butt), Flanged (RF / RTJ)

Some of clients :
Lorestan Petrochemical Company / Bakhtar Petrochemical Company.

Seat
Alen Screw
Oring
Sprial Wound
Guide Bush
Body
Lock Screw
Nut
Guide Bush
Coupling
Packing Set
Cualmn
Stud Bo
Oring
Gland
Indicator
Nut
Alen Screw
Bush Holder
Washer
Bush
Washer
Yoke
Handwhee
Nut
Lock Nut

Seat, Custom-Fit
Main Valve Body
Sampling System, Pneumatically Activated
Columns
Position Sensors
Full Automatic Control
Instrumentation & Control Unit
Main Valve Pneumatic Actuator, Double-Acting or Spring-Returned
Safety Sensors Cover all Valve Operations
Manual Override

Safety Valve (57000 Series)

Desuperheater is a device that reduces the temperature of superheated steam so that it can be used power plant & ...

Features :
Easy maintenance and customer oriented
Short and reliable delivery time
Special Design and fabrication capability
according to client's special offers.
All the main fabrication steps such as
Designing - Grinding - Welding & Coating - Machining - Polish & Lapping - Test .... are doing by the PSM's exclusive equipment.

Options :
PSV - ASME SEC 1
Conventional Design Type
Different fabrication material
(Such as SS,SS316,CF8M,CF3M,WCB...)
High temperature service
Hard faced seat and nozzle (Stellite & SS316)
Spring loaded and Pop action
Polished seat and nozzle
Screw Cap & Plain Lifting Lever
Open Bonnet
Test Gage

General Data :
Size : 1 - 10 in
Class : 150 - 1500
Connection : Screw and Butt Weld ,Flange (RF)

Some of Clients :
Bushehr Petrochemical Company

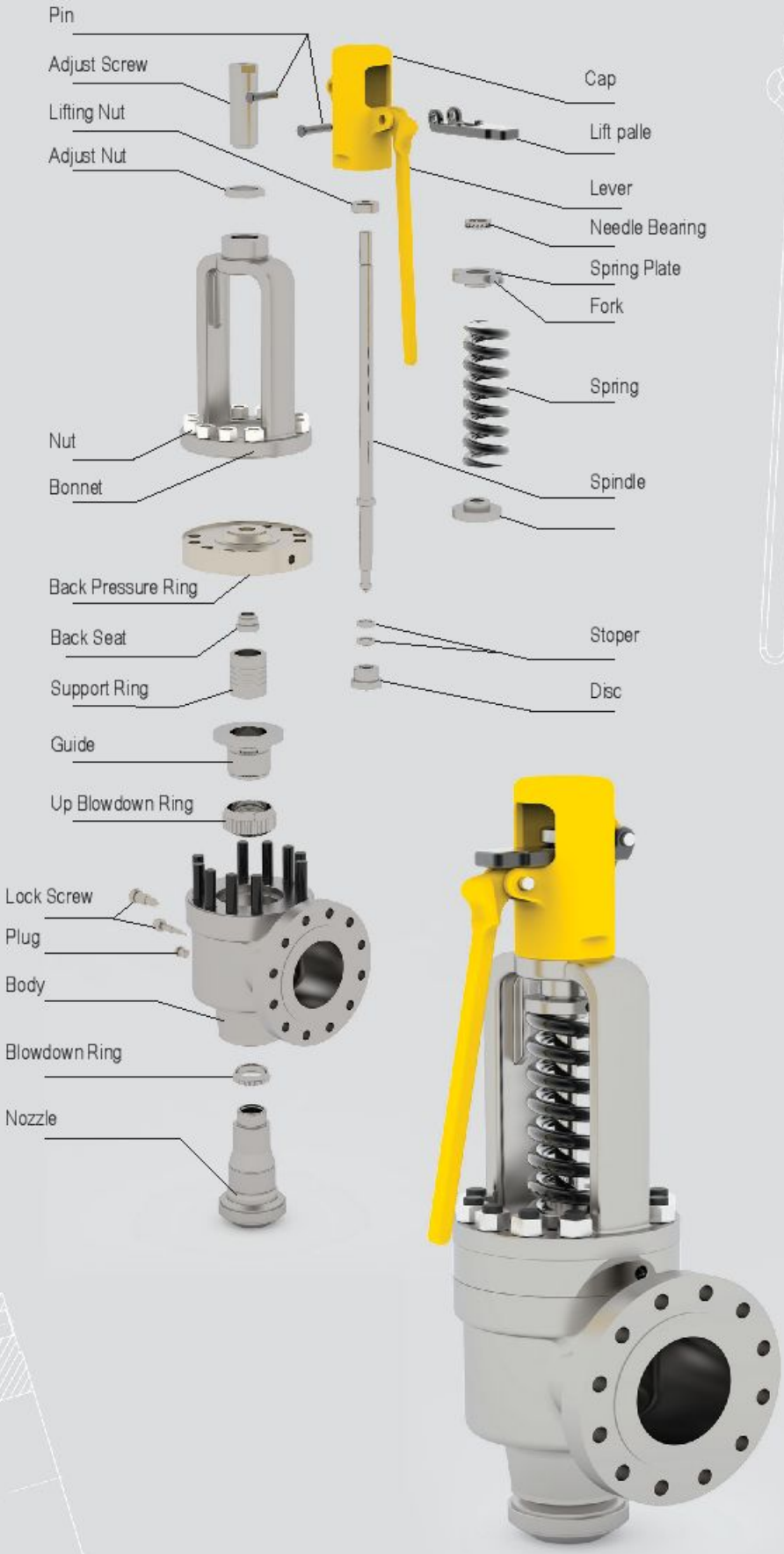
Pin
Adjust Screw
Lifting Nut
Adjust Nut
Cap
Lift palle
Lever
Needle Bearing
Spring Plate
Fork
Spring
Nut
Bonnet
Spindle
Back Pressure Ring
Back Seat
Stoper
Support Ring
Disc
Guide
Up Blowdown Ring
Lock Screw
Plug
Body
Blowdown Ring
Nozzle

Pneumatic Actuators (97 / 98 – 62 /63 Series)

Pneumatic actuators are devices that convert the energy of compressed air or gas into a mechanical motion that regulates one or more final control elements

Features:
Compatible with instruments that utilize traditional bracket-based mounting kits
Spring rates, travel stops, and manual operators are available for nearly any control valve application.
A molded diaphragm travels in a deep diaphragm casing, minimizing area change throughout the travel.
Reversable Fail Action
Coated Parts Against Corrosion
10 Years After Sale Service
2 Years Guarantee
Special Design and Fabrication Capability According to Client's Special Offers
All the main fabrication steps such as Designing, Routine Tests, ... are doing by the PSM's exclusive equipment

Options:
Spring Diaphragm / Piston-Spring Return / Micro Trim
Different Spring Range
Different Travel Range
Handwheel / Gearbox
Fail to Open / Close

General Data:
Size: 2 - 6 - 10 - 16 - 23 - 23L

Some of clients:
Pars Phenol Petrochemical Company / Arak Petrochemical Company / FanAvaran Petrochemical Company / Laleh Petrochemical Company

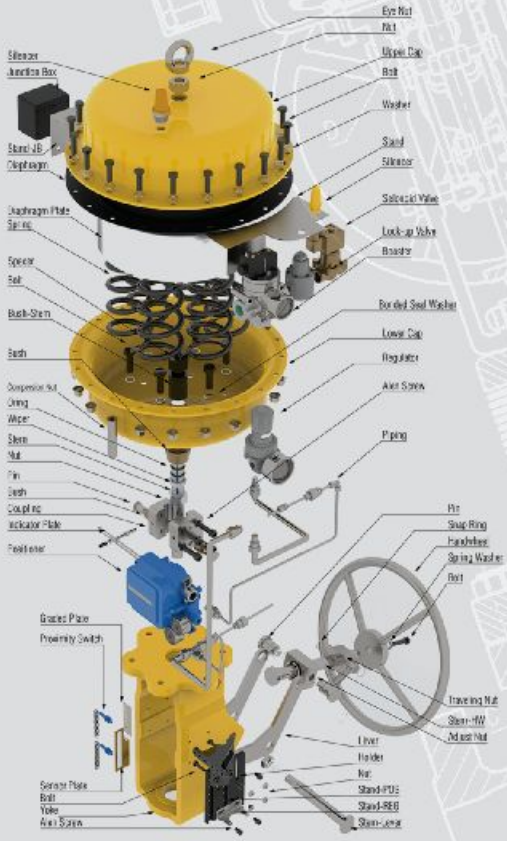
Eye Nut
Nut
Upper Cap
Bolt
Washer
Silencer
Junction Box
Stand JB
Diaphragm
Stand
Silencer
Diaphragm Plate
Spring
Solenoid Valve
Lock-up Valve
Bracket
Spacer
Bolt
Bush-Stem
Bonded Seal Washer
Lower Cap
Bush
Regulator
Suspension Nut
Allen Screw
Oring
Wiper
Stem
Nut
Pin
Bush
Coupling
Indicator Plate
Positioner
Piping
Pin
Snap Ring
Handwheel
Spring Washer
Bolt
Gauge Plate
Proximity Switch
Traveling Nut
Stem-HW
Adjust Nut
Lever
Holder
Nut
Stand-PDS
Stand-REG
Stem-Lever
Sensor Plate
Bolt
Yoke
Allen Screw

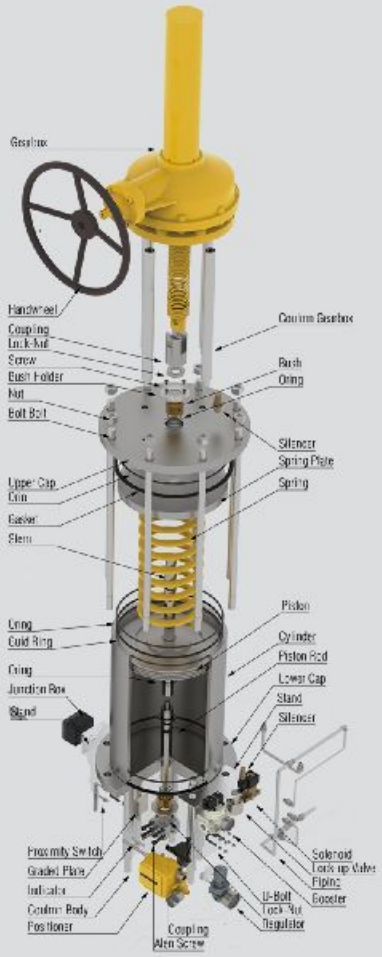
Gearbox
Handwheel
Coupling
Lock-Nut
Screw
Bush Holder
Nut
Bolt Bolt
Coupling Gearbox
Bush
Oring
Silencer
Spring Plate
Spring
Upper Cap
Oring
Guider
Stem
Oring
Guid Ring
Oring
Junction Box
Stand
Piston
Cylinder
Piston Rod
Lower Cap
Stand
Silencer
Proximity Switch
Guided Plate
Indicator
Coupling Body
Positioner
Coupling
Allen Screw
Solenoid
Lock up Valve
Piping
Booster
U-Bolt
Lock Nut
Regulator

Pressure Reducing Regulators (70000 Series)

A pressure reducing regulator is a control valve that reduces the input pressure of a fluid to a desired value at its output. It is a normally-open valve and is installed upstream of pressure sensitive equipment.

Features :
No Gas Emissions
Bubble-Tight Shutoff
Long Life in Severe Service Applications
Precise Pressure Control
Quiet Operation
Full Pressure Rating
Easy In-Line Maintenance
High Turn Down Capability
Travel Indicator
Main Diaphragm
Common Body Platform
Full Usable Capacity.
Disk Design
Hydrogen Ready

Options :
• Travel Indicator
• Whisper Trim™ Cage
• Relief Size-reduction Trim

General Data :
Spring-to-close pilot-operated pressure reducing regulator for low to high outlet pressure
Size: NPS 1-8in, NPS 12x6
End Connection: Weld (Socket/Butt), Flanged (RF)
Body Material: LCC or WCC Steel

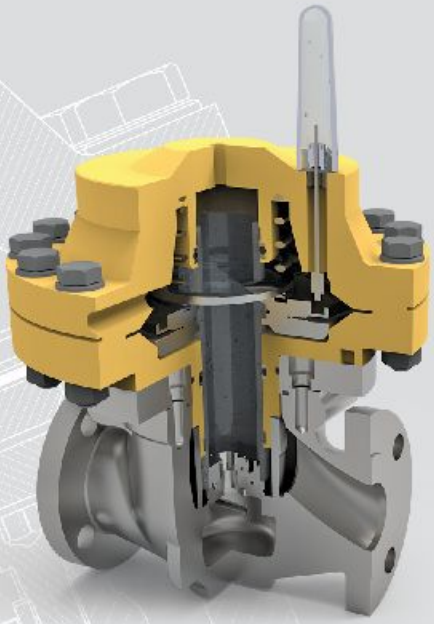

PSM
VALVE

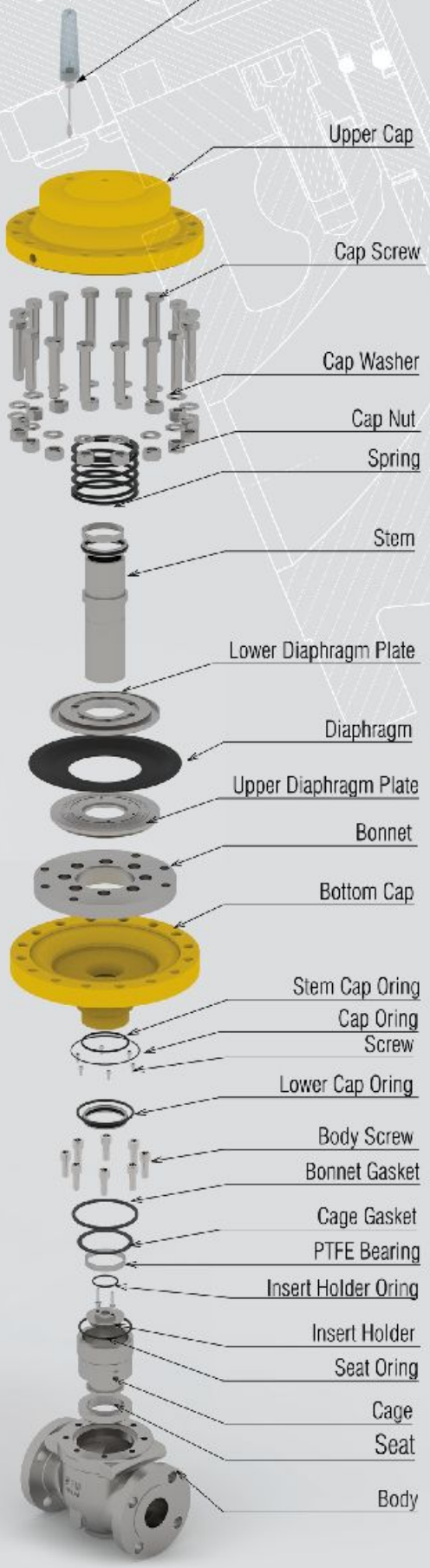
Indicator
Upper Cap
Cap Screw
Cap Washer
Cap Nut
Spring
Stem
Lower Diaphragm Plate
Diaphragm
Upper Diaphragm Plate
Bonnet
Bottom Cap
Stem Cap Oring
Cap Oring
Screw
Lower Cap Oring
Body Screw
Bonnet Gasket
Cage Gasket
PTFE Bearing
Insert Holder Oring
Insert Holder
Seat Oring
Cage
Seat
Body

Regulator Valve (70000 Series) Type A

Pressure regulating valves include pressure sustaining, reducing and relieving valves to provide safe and efficient operating conditions and automatically respond to changes to maintain the set pressure. Depending on Inlet/ Outlet Control Pressure, Flow capacity and Temperature, PSM regulators are classified in six Types: Type A-F.

Features :
Ideal for sour gas and corrosive applications or environments
Excellent stability and repeatability
Low droop
Tapped vent for exhaust gas capture
Built-in filter assemblies and dripwells
Manual or automatic drain options
Filter only assemblies available
Panel, bracket or pipe mounting
Superior regulation characteristics
Self-relieving of excess down stream pressure

Options :
Non-Relieving
Socket Head Build Screw
Micron Filter
Mounting Bracket
Pressure Gauge
Tamper Resistant Cove
Low Bleed Diaphragm
(Soft Relief Seat)

General Data :
regulator / relief valve for spring settings range from 5 to 100 psig / 0.35 to 7 bar
Port Size ¼”
END CONNECTION STYLE : NPT
BODY MATERIAL: Aluminum Die Casting, Trim Material : Stainless Steel, VALOX 420 , NBR ,
Neoprene/416 Stainless Steel , Zinc Plated Carbon Steel

Regulator Valve (70000 Series) Type B

Pressure regulating valves include pressure sustaining, reducing and relieving valves to provide safe and efficient operating conditions and automatically respond to changes to maintain the set pressure. Depending on Inlet/ Outlet Control Pressure, Flow capacity and Temperature, PSM regulators are classified in six Types: Type A-F.

Features :
Versatility / Compact Design
Excellent Fluid Compatibility Low droop
Close, Stable RegulationBuilt-in filter assemblies and dripwells
Hydrogen Ready
Differential Pressure Capability
Handwheels
Sour Gas Service Capability
Arctic Temperature Constructions
API 614 Compliant
FDA, USP Class VI and ADI Free EPDM Elastomers

Options :
Handwheel or tee handle for Types MR98L, MR98H and MR98HH
Tapped spring case vent for Types MR98L, MR98H and MR98HH
Seal washer to permit spring case pressure loading for Types MR98L, MR

General Data :
BODY SIZE : 1/4 in. / DN --- 1/2 in. / DN 15 3/4 in. / DN 20 1 in./ DN 25
BODY MATERIAL : Aluminum ,
Trim Material : Stainless Steel, NBR , Neoprene/416 Stainless Steel , Zinc Plated Carbon Steel

Regulator Valve (70000 Series) Type C & D

Pressure regulating valves include pressure sustaining, reducing and relieving valves to provide safe and efficient operating conditions and automatically respond to changes to maintain the set pressure. Depending on Inlet/ Outlet Control Pressure, Flow capacity and Temperature, PSM regulators are classified in six Types: Type A-F.

Features :
Handwheels/Tee Handles
Versatile
Tight Shutoff With Elastomer Seats
Direct-Operated
Robust
Rugged Construction
Differential Pressure Capability
Arctic Temperature Constructions
Special Service Capabilities
Large Turndown Ratio
Multiple End Connection Options
Easy Maintenance
API 614 Compliant

Options :
Handwheel or tee handle
Tapped spring case vent
Seal washer to permit spring case pressure loading

General Data :
Backpressure regulator/Reducing valve for spring settings range from 2 to 375 psig / 0.14 to 25.9 bar
Body Sizes from ¼” to 2”
END CONNECTION STYLE: Flange , NPT, SWE, Welded ,
BODY MATERIAL : Gray Cast Iron, LCC or WCC Steel, CF8M Stainless Steel, CF3M Stainless Steel,
Monel or Hastelloy

Regulator Valve (70000 Series) Type E

Pressure regulating valves include pressure sustaining, reducing and relieving valves to provide safe and efficient operating conditions and automatically respond to changes to maintain the set pressure. Depending on Inlet/ Outlet Control Pressure, Flow capacity and Temperature, PSM regulators are classified in six Types: Type A-F.

Features :
Top and Bottom Guiding
High Capacity with Low Recovery
Reduced Capacity Trim
High Performance Materials
High Temperature Applications

Options :
Non-Relieving
Socket Head Build Screw
Micron Filter
Mounting Bracket
Pressure Gauge
Tamper Resistant Cove
Low Bleed Diaphragm (Soft Relief Seat)

General Data :
regulator valve for spring settings range from Class 150 to 600
Port Size from 3/4" to 4"
END CONNECTION STYLE: Flange
BODY MATERIAL: Carbon steel, stainless steel, Trim Material : Stainless Steel

Arc Valve (90000 Series)

The Automatic Recirculation Valve is a protective device. It automatically protects centrifugal pumps from damaging, which may occur through partial evaporation of the pump content during low load operation.
As soon as the main flow falls below a predetermined rate, the valve opens its bypass sufficiently to maintain the required pump minimum flow rate, even if the main flow is zero
As soon as the main flow falls below a predetermined rate, the valve opens its bypass sufficiently to maintain

Features :
Size independent
High pressure design
Multistage letdown
Enhanced bypass sealing
Letdown varies with stroke
Enhanced noise attenuation
Forged or cast body in CS or SS material
Non return valve in bypass

Options :
Temperature : Minus 100°C to 500°C
Heating jacket : Full or semi jacketing
Bypass trim design :Throttle plates /Multi stage, hollow, or cage trim in bypass
Installation: Vertical /Horizontal
Other options: Maritime sea water service ARC design Valves conforming to NACE MR-01-75Tamper Resistant Cove
Control Trim Options: varying the number, size and position of the nozzles

General Data :
To protect pumps and ensure minimum flow conditions
Size : 1“ to 16“ as standard,
Body and bypass : Carbon or Stainless steel (316L)
Trim materials: Stainless steel (316L)
Temperature: Minus 20° to 300°C
Pressure rating All up to ASME 2500 (PN320)
Connection types Butt weld end or flanged (DIN or ANSI)

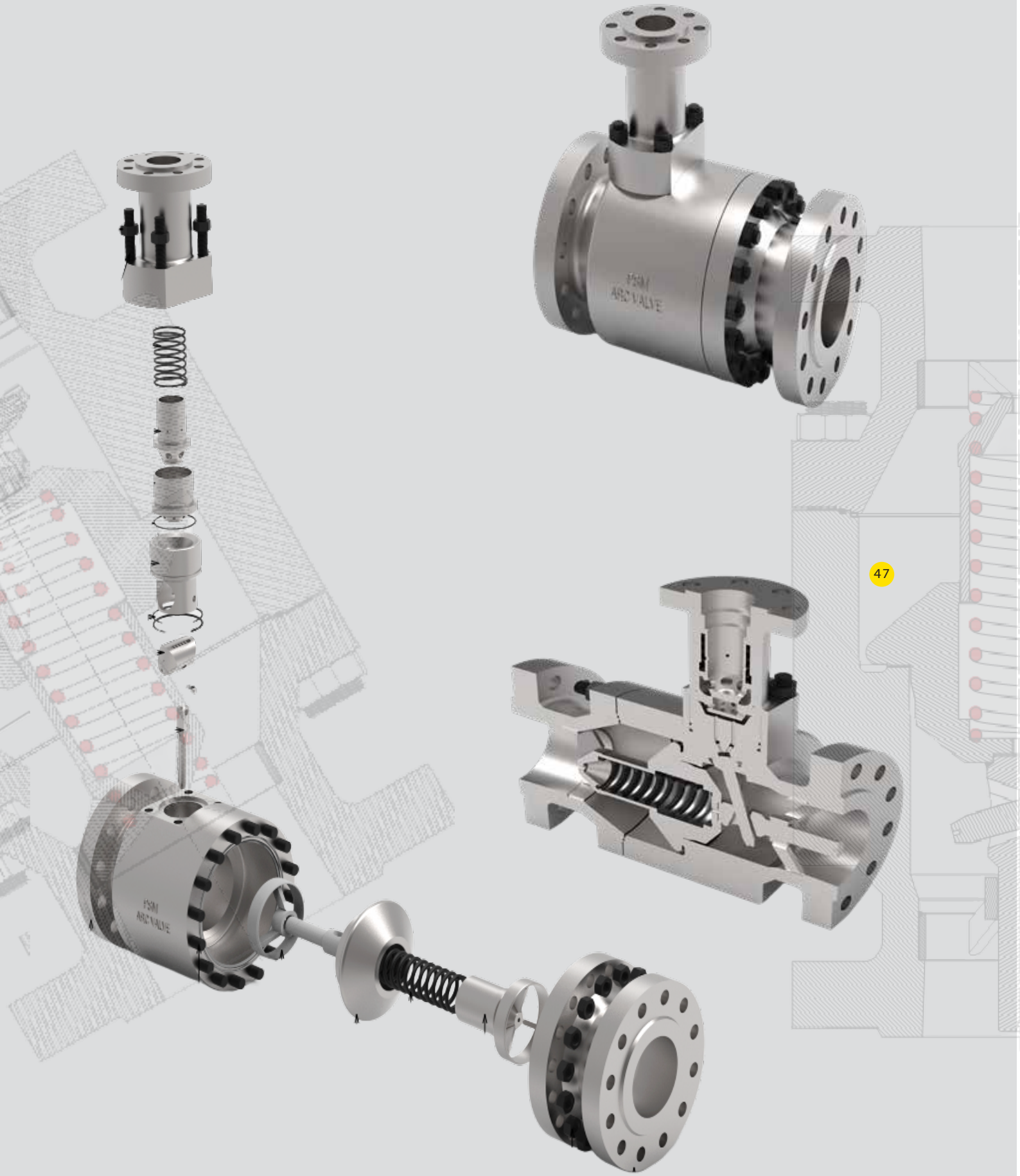
FSM
ARC VALVE
FSM
ARC VALVE

PETRO SAZEH MIHAN CO.

Grade-1 knowledge enterprise company

Designing & Manufacturing of Control Valves

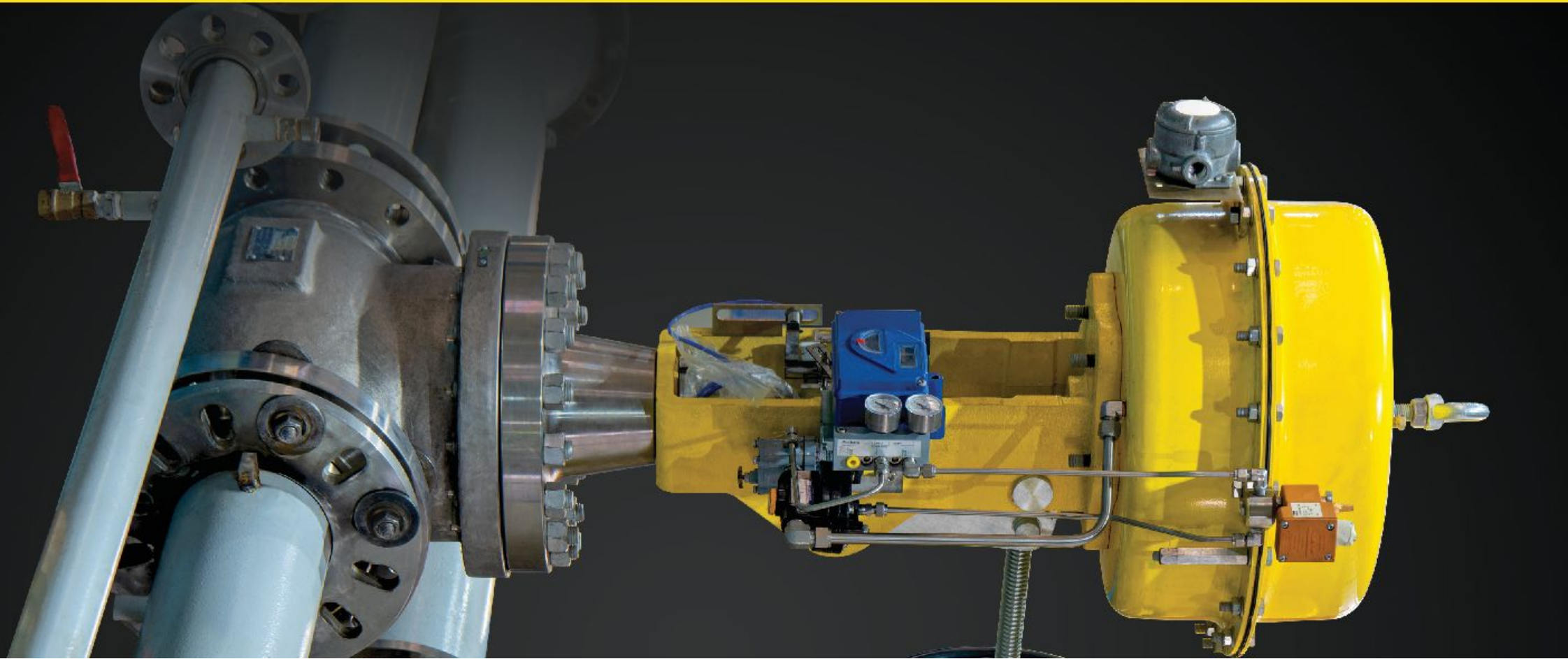

Loop Test
Control Valve Capacity Test (CV)

To verify valve performance, Petro Sazeh Mihan tests its products under dynamic process conditions. Petro Sazeh Mihan employed its closed-loop control Test to verify the valve's characteristics & Coefficients. There are 5 special lines in this closed-loop control valve test bench which can cover test of control valves from 1/ 2" – 24".

We test the performance and flow capacity of all PSM-manufactured valves in our "Flow Lab" as in an actual closed-loop control system.

Evaluating control valve assemblies under closed-loop conditions provides the only true measure of variability performance. Closed-loop performance data proves significant reductions in process variability can be achieved by choosing the right control valve for the application.

Research within the industry has found the particular design features of the final control element, including the valve, actuator, and positioner, are very important in achieving good process control under dynamic conditions.

Some of the most important design considerations that test & verify in closed-loop control include :

- Deadband
- Actuator/positioner design
- Valve response time
- Valve type and characterization
- Valve sizing
- Valve Coefficients

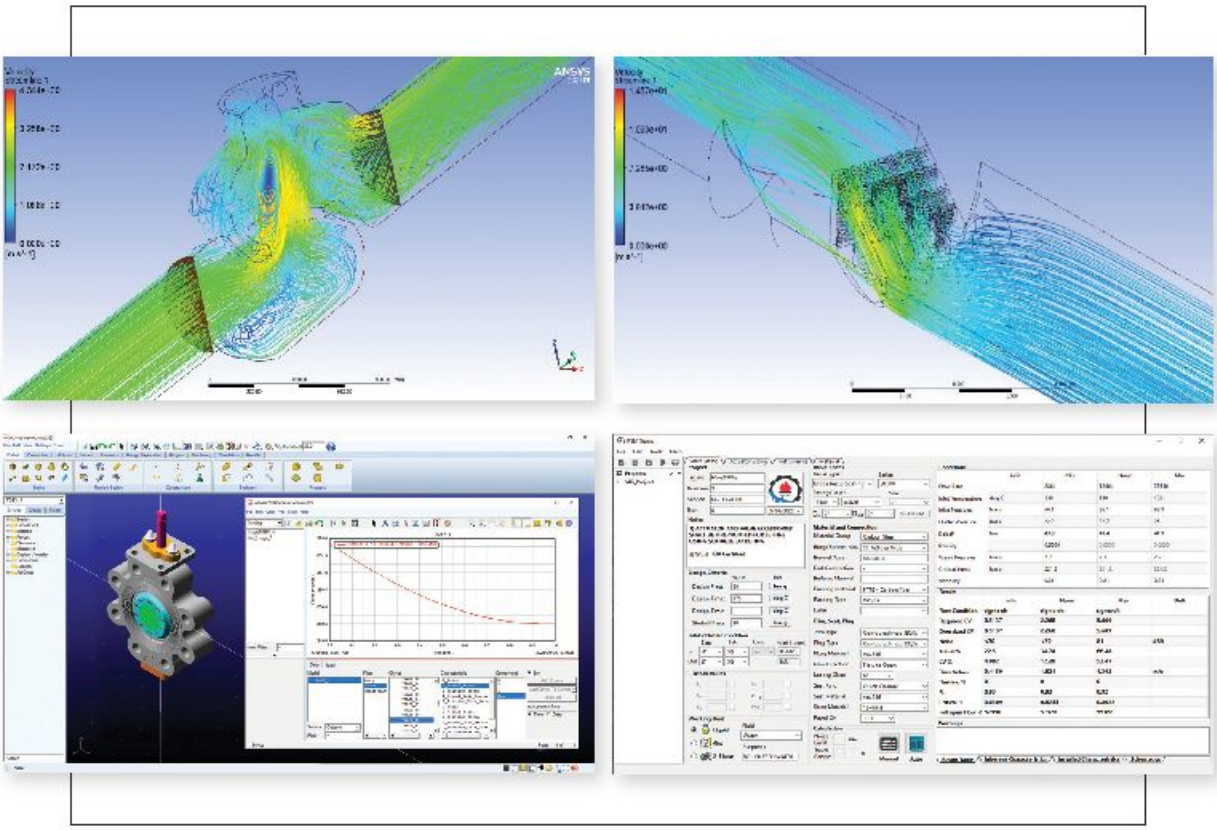

Sizing & Analysis

Petro Sazeh Mihan as a native knowledge company ,has developed its own software for Control Valve Sizing . This software is designed by PSM software development department based on international standard (ISA -75.01.01) and Empirical Data gathered from tests and analyses.
PSM Engineering & R&D Departments employ a variety types of technical software & international standards in order to Precise & reliable design & Drawing.

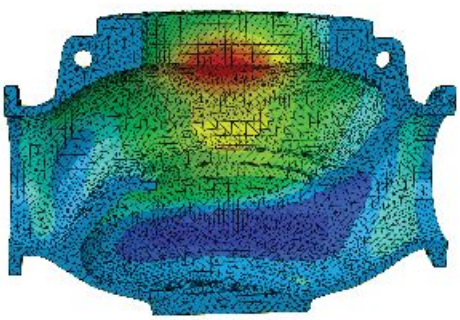

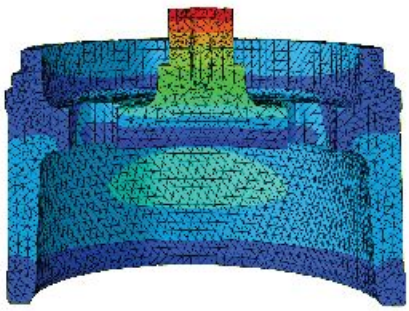

HVOF Thermal Spray

High Velocity Oxygen Fuel (HVOF) coating is a thermal spray process in which a fuel and oxygen are mixed, fed into a combustion chamber, and ignited. The gas produced in the combustion chamber has an extremely high temperature and pressure and is ejected through a nozzle at supersonic speeds. Powder is injected into the high velocity gas stream and propelled at the substrate to be coated. The result is a coating that has a low porosity and a high bond strength to the substrate material, which provides it with wear and / or corrosion resistance.
In the HVOF spraying process, the high velocity of the particles produces kinetic energy, which is more important than the temperature. One of the benefits of the HVOF spraying process is that extremely dense and hard coatings can be produced at relatively low temperatures.

HP-HVOLF

A new generation of HVOF systems, the so-called high-pressure HVOLF systems (HP-HVOLF), enable the efficient production of very dense carbide layers. The pressure in the combustion chamber (as one of the options to increase the efficiency of the system) needs to be regulated, in order to meet existing safety standards for oxygen supply. Kerosene/oxygen combustion is still the most environmentally friendly and the simplest solution for designing a new generation of high-performance HP-HVOF systems.

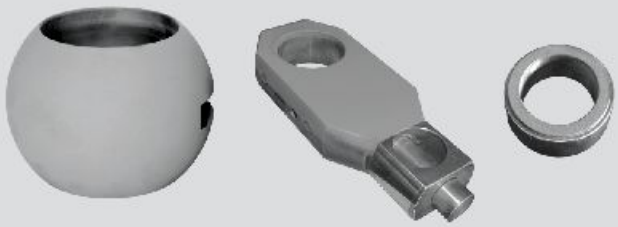

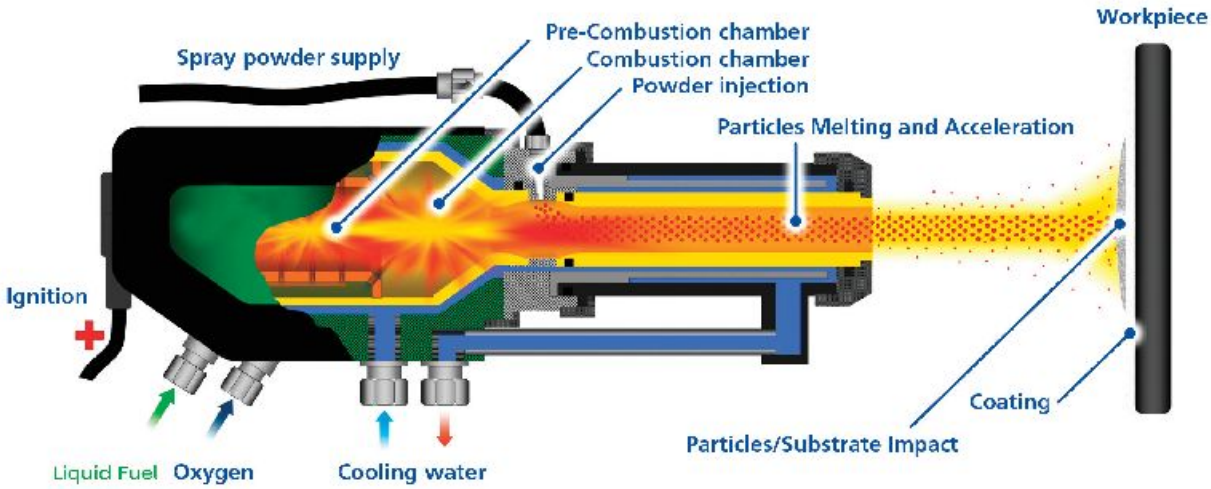

Benefits of HVOF Coating

Lower porosity (<1%)
Due to greater particle impact velocity

Higher hardness
Due to less degradation of carbide phases

Better wear resistance
Due to harder, tougher coatings

Lower oxide content (<1%)
Due to less in-flight exposure time

Retention of powder chemistry
Due to reduced time at temperature

Improve corrosion protection
Due to less Through Thickness porosity

Smoother as-sprayed surface
Due to higher impact velocities and smaller sizes

Higher strength bond to the substrate
Due to high particle kinetic energy

Commonly sprayed coating materials

Tungsten carbide

WC-10Co-4Cr
WC-17Co, WC-12Co

Nickel based coatings

Colmonoy

Cobalt based coatings

Stellite

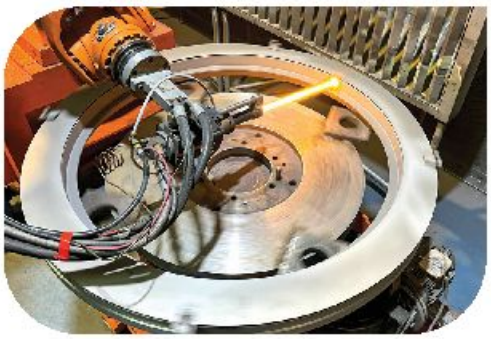

Chrome carbide

Cr_3C_2-NiCr

Thermal barrier coatings

MCrAlY:NiCoCrAlY
NiCrAlY,CoCrAlY

Common Applications of HVOF Coatings
Oil, gas and petrochemical Industries
(Ball Valve,Gate Valve,Plunger)
Hydraulic Industries
(Hydraulicrods,Pistons, Hydraulic cylinder rods)
Marine Industries (Piping,Pump)
Power plant Industries (Nozzle guide vanes, Impellers)
Textile Industries (Godet rolls,Grooved rolls,Thread guide)
Transportation Industries (Support,Sleeves)
Mining Industries (Drills,Mills,Mineral transport conveyors)
Steel Industries (Coiling mandrel,pinch roll
Paper and printing Industries (Printer rollers,paper presses,Calender rolls)
Aerospace Industries (Gas turbine blades,Bearings)

Petro Sazeh Mihan (PSM.Co) as a designer and manufacturer of various types of control valves, has had many collaborating with great industries such as oil, gas, petrochemical, power plants and other related companies. These collaborations are including a wide range of reverse engineering, manufacturing, reconstruction, designing, coating, repairment and standard tests for different types of valves besides of consulting services in the field of selection and troubleshooting of control valves. Hence, the company is registered on the list of certified suppliers by the Ministry of Petroleum (AVL) and the vendor list of the most petrochemicals, refineries, other great industries

Some of companies which PSM.Co have the cooperation with them:

Clients

Pars Oil and Gas Company
شرکت نفت و گاز پارس

South Pars Gas Company
شرکت مجتمع گاز پارس جنوبی

Mobarakeh Steel Company
شرکت فولاد مبارکه اصفهان

National Iranian Copper Industries Co.
شرکت ملی صنایع مس

East oil and Gas Production company
شرکت بهره برداری نفت و گاز شرق

West oil and Gas Production company
شرکت بهره برداری نفت و گاز غرب

Iranian Offshore Oil Company
شرکت نفت فلات قاره ایران

Iranian Central Oil Fields Company
نفت مناطق مرکزی

National Iranian South Oil Company
نفت خیز جنوب

Thermal Power Plants Holding Company
شرکت مادر تخصصی تولید نیروی برق حرارتی

Iran Oil Pipelines and Telecommunications Company
شرکت خطوط لوله و مخابرات نفت ایران

Pars Glycol Petrochemical Company
پتروشیمی پارس گلایکول

AzarAb Industries
صنایع آذرآب

North Drilling
حفاری شمال

National Petrochemical Company
شرکت ملی صنایع

پایانه های نفتی

Terminal and Tanks petrochemical company
شرکت پایانه و مخازن پتروشیمی

Fakoor Meghnatis Spadana Co.
فکور مغناطیس اسپادانا

Kermanshah Petrochemical Industries Company (kpic)
شرکت صنایع پتروشیمی کرمانشاه

Ilam Petrochemical Company
پتروشیمی ایلام

Bushehr Petrochemical Company
پتروشیمی بوشهر

Diariapolymer Petrochemical Company
پتروشیمی دی آریا پلیمر خمین

Lavan Oil Refining Company
شرکت پالایش نفت لاوان

Jam Petrochemical company
شرکت پتروشیمی جم

Tabriz Petrochemical company
پتروشیمی تبریز

AryaSasol Petrochemical company
پتروشیمی آریاساسول

Pardis Petrochemical company
پتروشیمی پردیس

Razi Petrochemical company
پتروشیمی رازی

Morvarid Petrochemical company
پتروشیمی مروارید

Nori Petrochemical company
پتروشیمی نوری

Padjam Polymer
صنایع پلیمر پاد جم

SADRA Iran Marine Industrial Company
صدرا صنایع دریایی

Mobin Petrochemical Co.
مبین انرژی خلیج فارس

OEIC
مهندسی ساختمان صنایع نفت

Research an Technology
پژوهش پتروشیمی

Aria phosphorus Petrochemical
پتروشیمی آریا فسفریک

Kharazmi Petrochemical Co
پتروشیمی خوارزمی

Steam Engineering Co
شرکت استیم

SPEC Co
طراحی مهندسی و تامین قطعات و مواد پتروشیمی

PIDEC
طراحی و مهندسی صنایع پتروشیمی

Zagros Petrochemical Company
شرکت پتروشیمی زاگرس

Abadan Petrochemical Company
پتروشیمی آبادان

Kavian Petrochemical Corporation
پتروشیمی باختر کاویان

Aluminium Arak Company
ایرالکو آلومینیوم اراک

PIDEMCO
مدیریت توسعه صنایع پتروشیمی

Foolad Oxinsteel Co
شرکت فولاد اکسین خوزستان

Kangan Petro Refining Co. (KPRC)
شرکت پتروپالایش کنگان

Badre Shargh Petrochemical

Corporation
مجتمع پتروشیمی بدر شرق

Rampco
رامکو

Salman Farsi Petrochemical
پتروشیمی سلمان فارسی

Dehdasht Petrochemical Co
پتروشیمی دهدشت

OEIC
مجتمع پتروشیمی دهلران

Kermanshah Oil Refining Company
شرکت پالایش نفت کرمانشاه

Esfahan Petrochemical Company
پتروشیمی اصفهان

Tabriz Petrochemical Company
پتروشیمی تبریز

Khorasan Petrochemical Co.
شرکت پتروشیمی خراسان

Sarkhoon And Qeshm Gas Refinary
پالایشگاه گاز سرخون و قشم

Gachsaran Oil and Gas Co.
نفت و گاز گچساران

Boalisina Petrochemical Co
شرکت پتروشیمی بوعلی سینا

Aghajari Oil and Gas Co.
شرکت بهره‌برداری نفت و گاز آغاجاری

Narghan Engineering Co
مهندسی نارگان

Khozestan Petrochemical Company
پتروشیمی خوزستان

Enerchimi Engineering Co
مهندسی انرشیمی

Imam Khomeini Oil Refinery
پالایشگاه نفت امام خمینی شازند

Esfahan Oil Refinery
پالایشگاه نفت اصفهان

Bandarabas Oil Refinery
پالایشگاه نفت بندر عباس

Tabriz Oil Refinery
پالایشگاه نفت تبریز

Abadan Oil Refinery
پالایشگاه نفت ابادان

Lavan Oil Refinery
پالایشگاه نفت لاوان

Pasargad Oil Co
شرکت نفت پاسارگاد

Bidboland Gas Refinery
پالایش گاز بید بلند خلیج فارس

Hasheminejad Gas Refinery
پالایش گاز هاشمی نژاد

Parsian Gas Refinery
پالایش گاز پارسیان

Fajrjam Gas Refinery
پالایش گاز فجر جم

Seraje Gas Refinery
پالایش گاز سراجه

Ilam Gas Refinery
پالایش گاز ایلام

Kordestan Petrochemical Company
پتروشیمی کردستان باختر

Parsglaykol Petrochemical Company
پتروشیمی پارس گلایکول باختر

Dipoleymer Aria Petrochemical Company
پتروشیمی دی پلیمر آریا

Miyandoab Petrochemical Company
پتروشیمی میاندوآب باختر

Bandaremamkhomeyni Petrochemical Company
پتروشیمی بندر امام خمینی

Tondghoyan Petrochemical Company
پتروشیمی تندگویان

Fanavaran Petrochemical Company
پتروشیمی فن آوران

Laleh Petrochemical Company
پتروشیمی لاله

Amirkabir Petrochemical Company
پتروشیمی امیرکبیر

Karoon Petrochemical Company
پتروشیمی کارون

Arvand Petrochemical Company
پتروشیمی اروند

Fajr Petrochemical Company
پتروشیمی فجر

Ghajsaran Petrochemical Company
گچساران

Masjedsoleyman Petrochemical Co.
پتروشیمی مسجد سلیمان

Ghaedbasir Petrochemical Company
پتروشیمی قاید بصیر

Shazand Petrochemical Company
پتروشیمی شازند

Machine Sazi Arak
ماشین‌سازی اراک

South Zagros Oil and Gas Exploitation Company
شرکت بهره برداری نفت و گاز زاگرس جنوبی

Shazand Power Plant
نیروگاه برق شازند

Kerman Power Plant
نیروگاه برق کرمان

Iranian Gas Transmission Company
مناطق عملیات گازی

Distinct 2
منطقه گازی 2

Distinct 8
منطقه گازی 8

Distinct 6
منطقه گازی 6

Fooladhormozgan Steel Company
مجتمع فولاد هرمزگان

South Pars Gas Company
شرکت مجتمع گاز پارس جنوبی

MAPNA Group
گروه مپنا

Mobarakeh Steel Company
شرکت فولاد مبارکه اصفهان

National Iranian Copper Industries Co.
شرکت ملی صنایع مس ایران

PSM

900
10

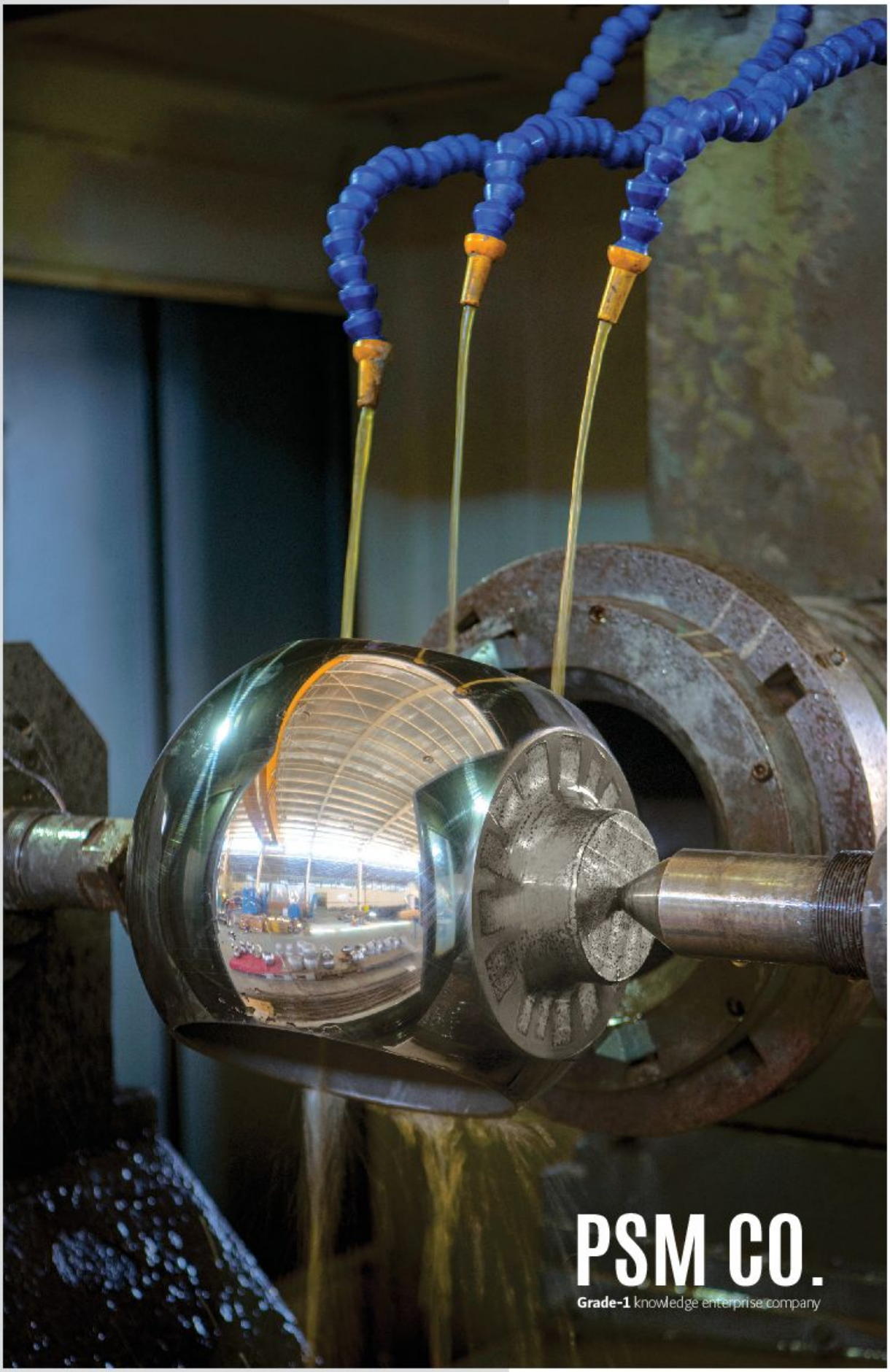

PSM CO.

Grade-1 knowledge enterprise company

NEGAREH : 086-91009001

PETRO SAZEH MIHAN CO.

PSM | **Grade-1** knowledge enterprise company

Designing & Manufacturing of Control Valves

Factory : Sanat St., Hajiabad Industrial Zone, Arak Iran
Tell: (+98 86) 34131533 Fax: (+98 86) 34131533-115 Zip Code: 3819958199

www.psmvalve.com info@psmvalve.com psmvalve@gmail.com